Co-evolution of Metamodels and Models through Consistent Change Propagation

Andreas Demuth
Roberto E. Lopez-Herrejon
Alexander Egyed

Johannes Kepler University Linz
Institute for Systems Engineering and Automation
{andreas.demuth|roberto.lopez|alexander.egyed}@jku.at

Co-Evolution Definition

- "The change of an object triggered by the change of a related object."

  Yip et al. (2008). "An integrated system for studying residue coevolution in proteins". Bioinformatics 24 (2): 290–292.

Co-Evolution Definition

- "The change of an object triggered by the change of a related object."

  Yip et al. (2008). "An integrated system for studying residue coevolution in proteins". Bioinformatics 24 (2): 290–292.

Artifact A

Artifact B

Co-Evolution Definition

- "The change of an object triggered by the change of a related object."

  Yip et al. (2008). "An integrated system for studying residue coevolution in proteins". Bioinformatics 24 (2): 290–292.

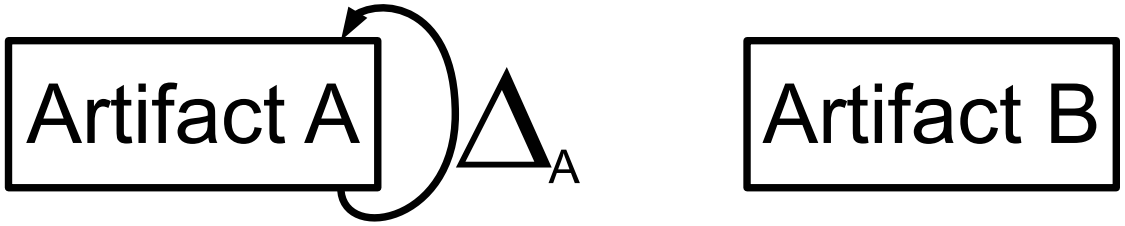

Co-Evolution Definition

- "The change of an object triggered by the change of a related object."

  Yip et al. (2008). "An integrated system for studying residue coevolution in proteins". Bioinformatics 24 (2): 290–292.

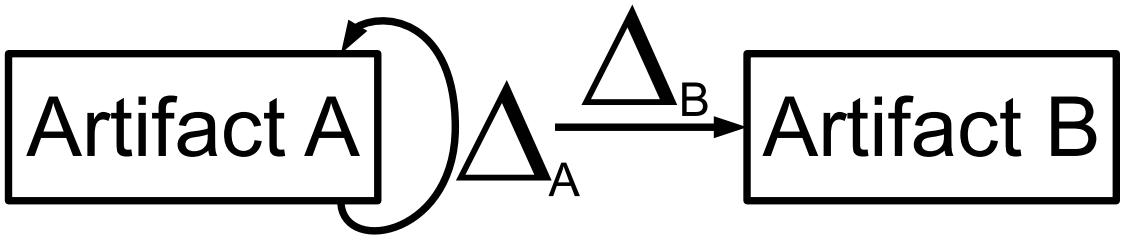

Running Example

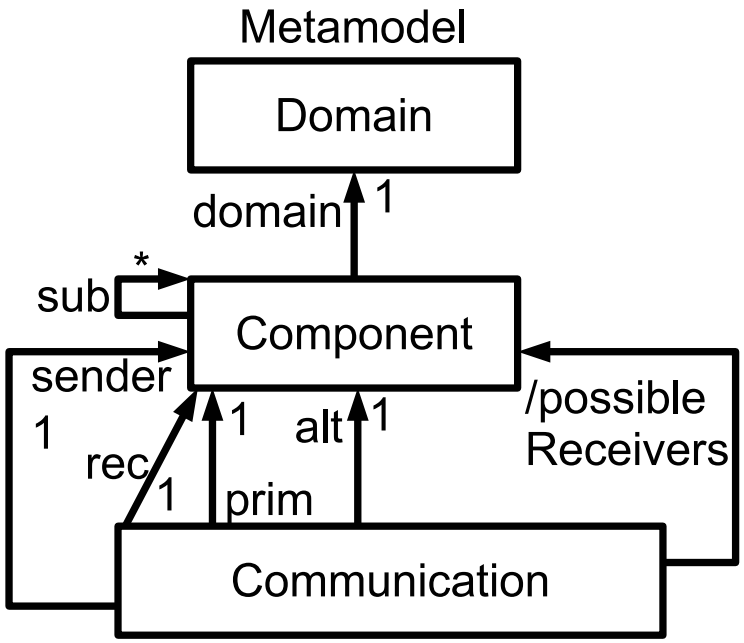

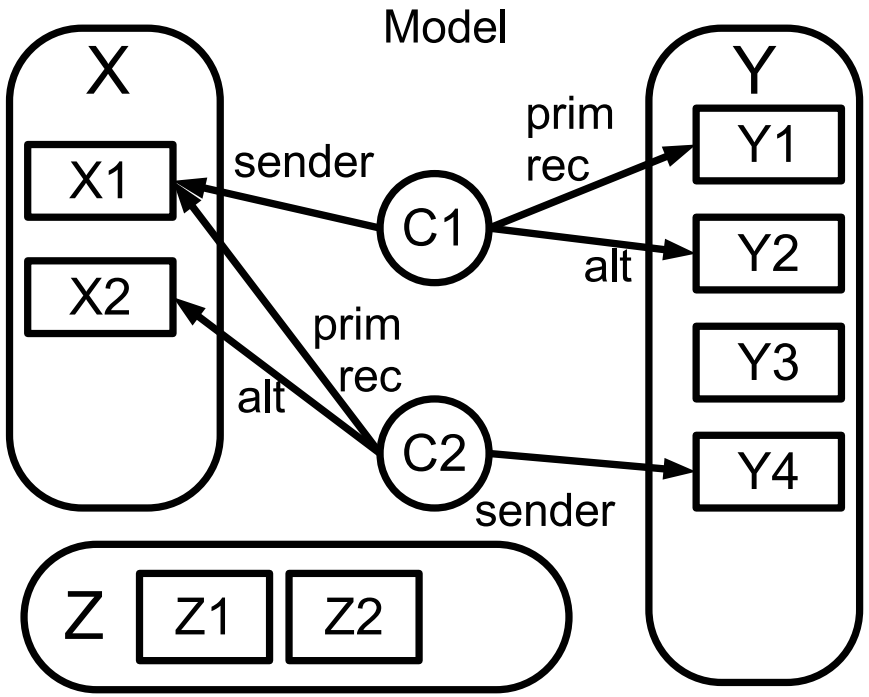

Traditional Co-Evolution

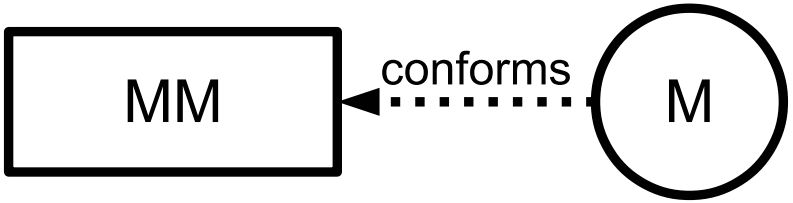

Traditional Co-Evolution

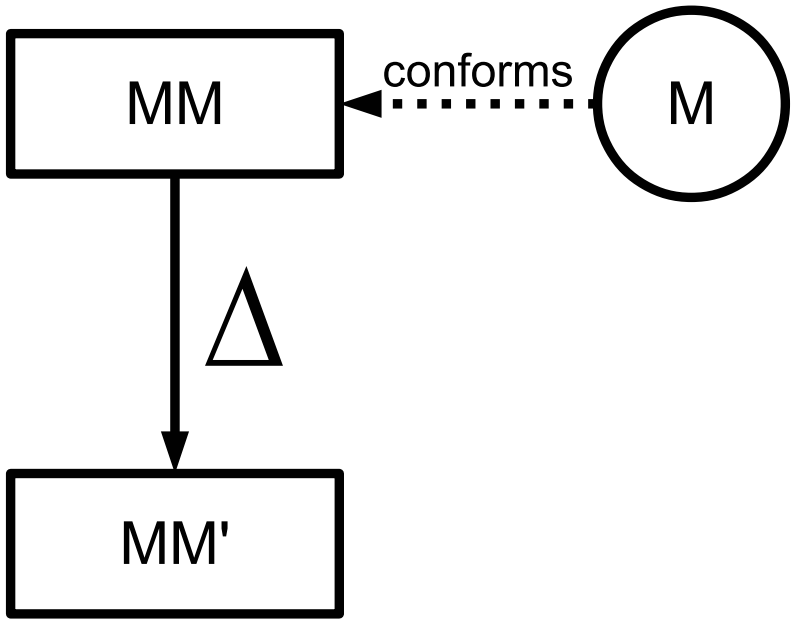

Traditional Co-Evolution

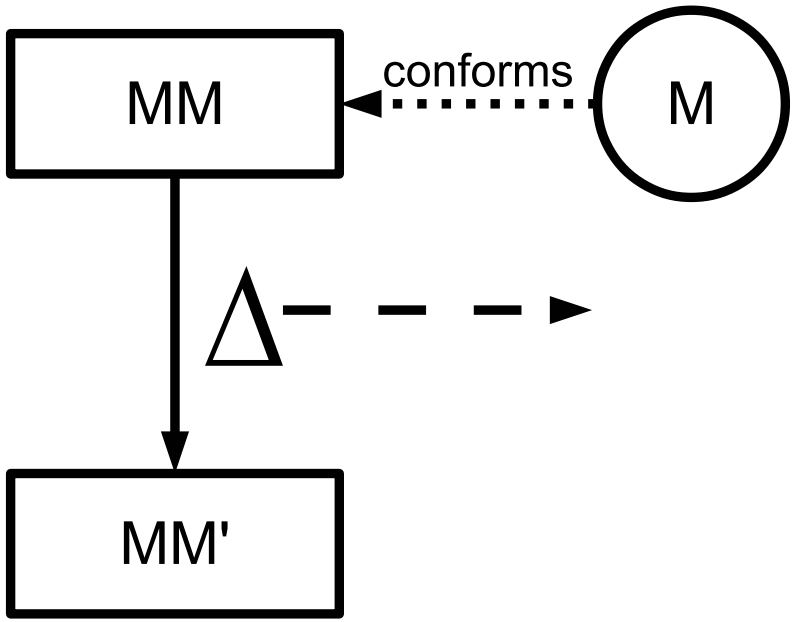

Traditional Co-Evolution

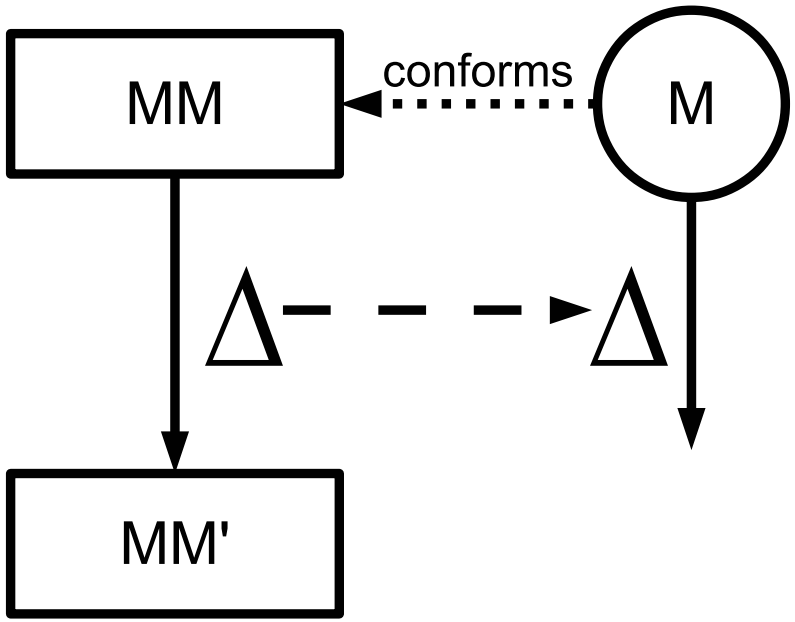

Traditional Co-Evolution

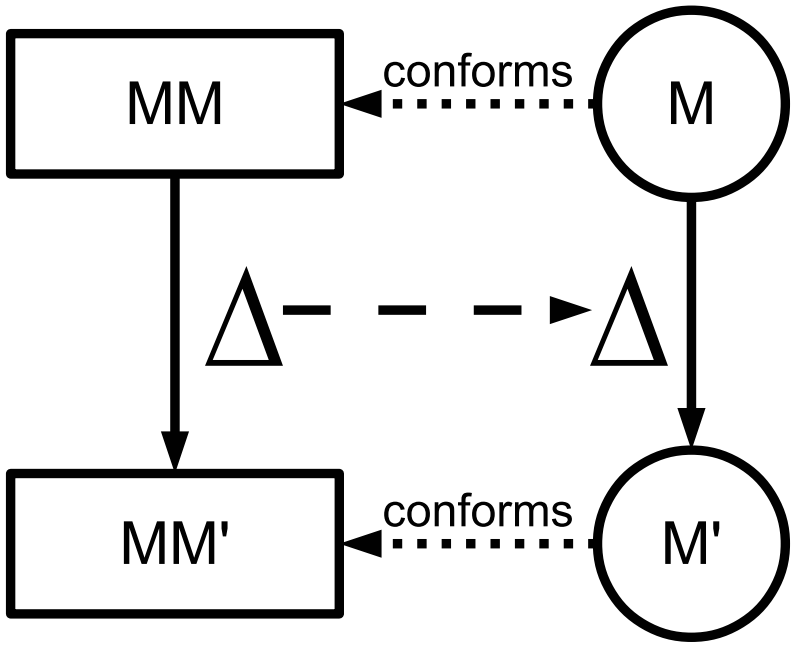

Ambiguous Co-Evolution

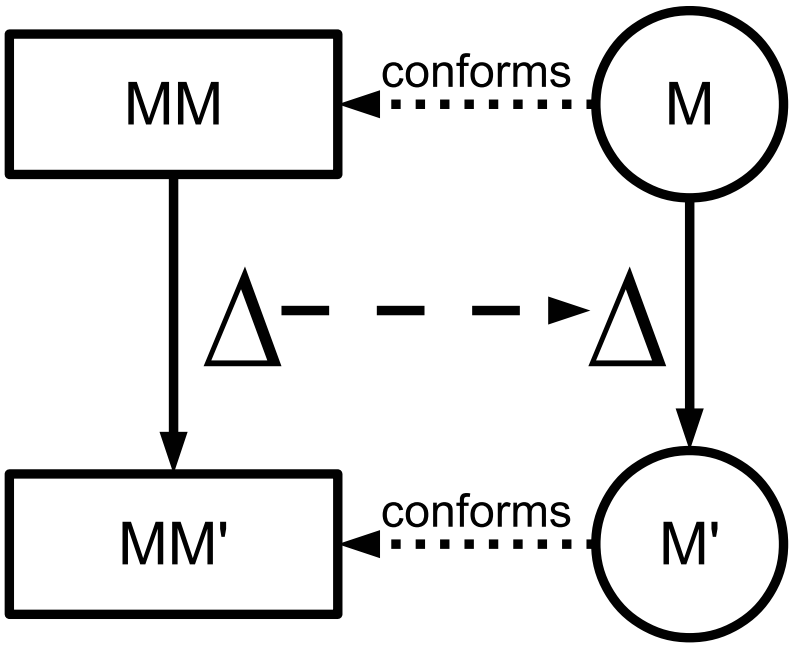

Ambiguous Co-Evolution

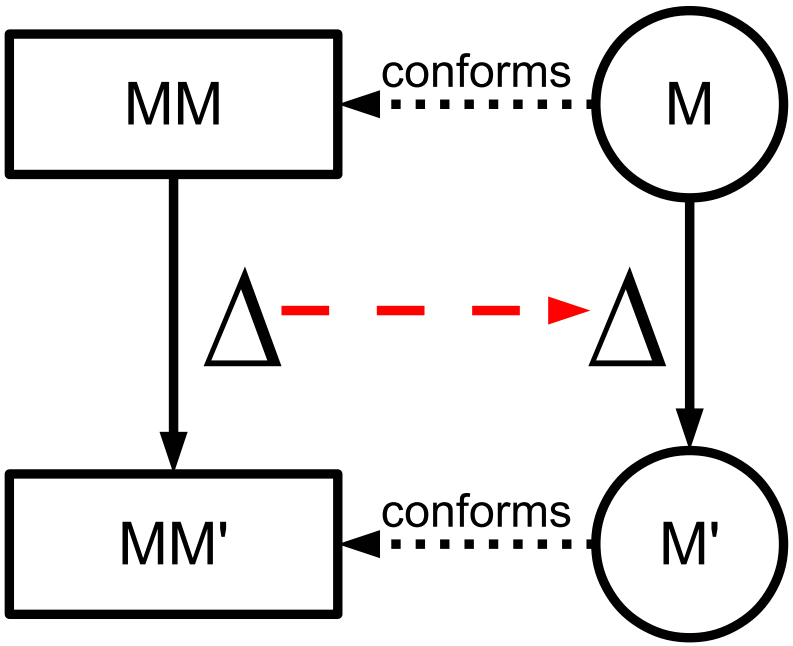

Ambiguous Co-Evolution

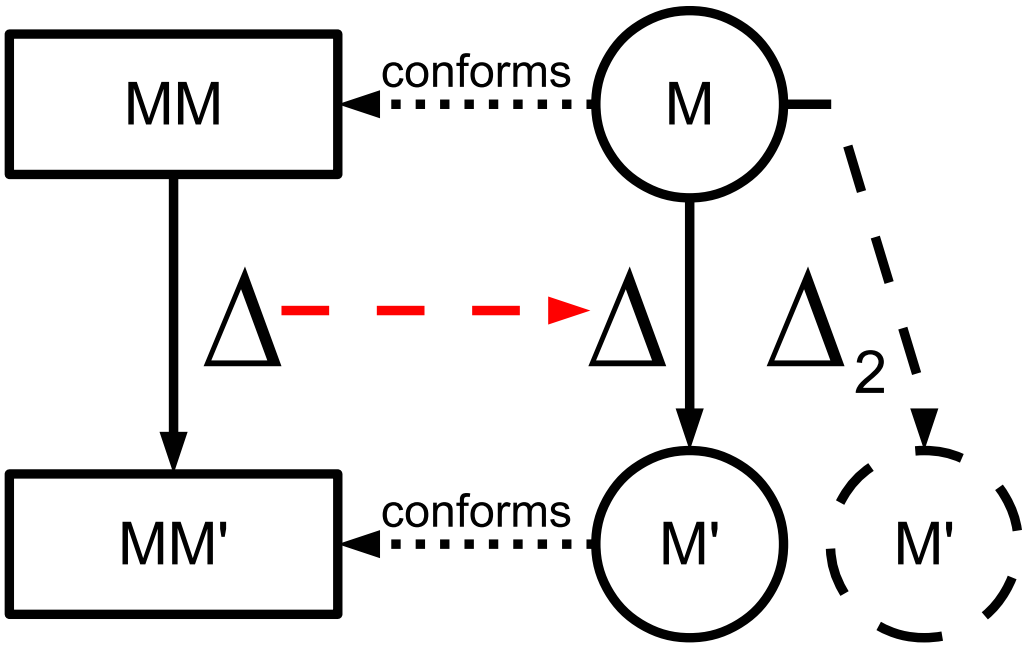

Ambiguous Co-Evolution

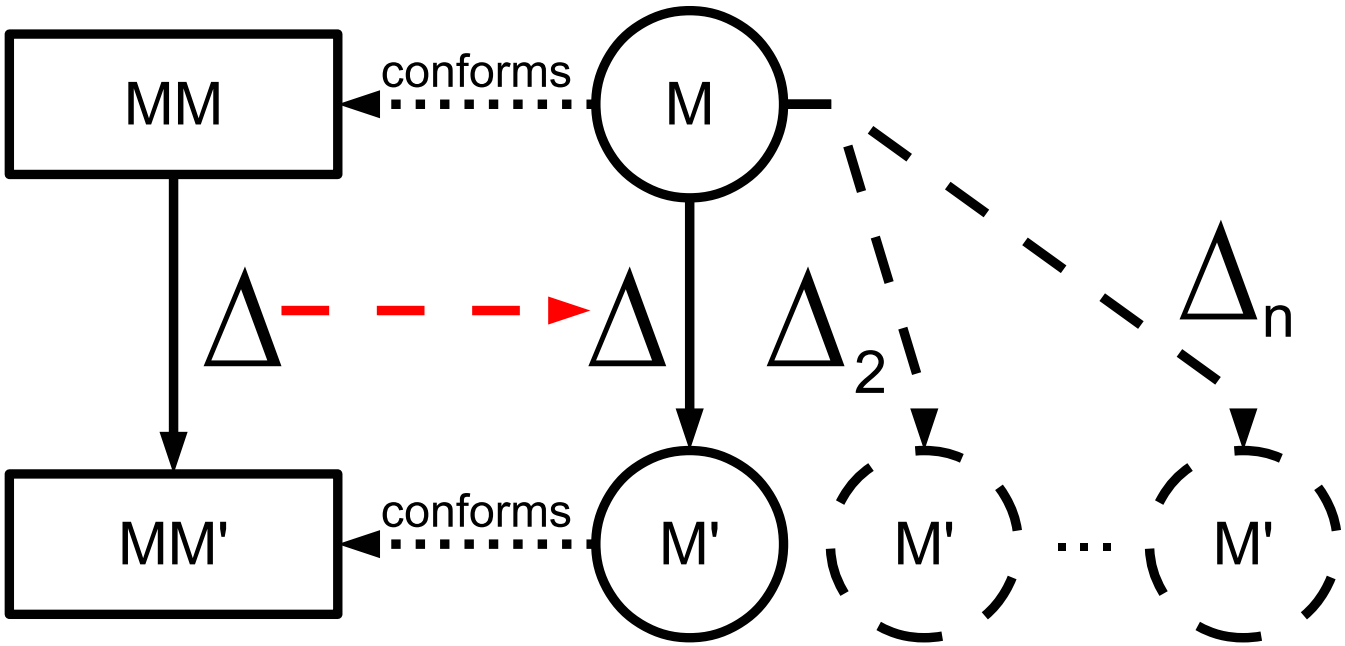

Ambiguous Co-Evolution

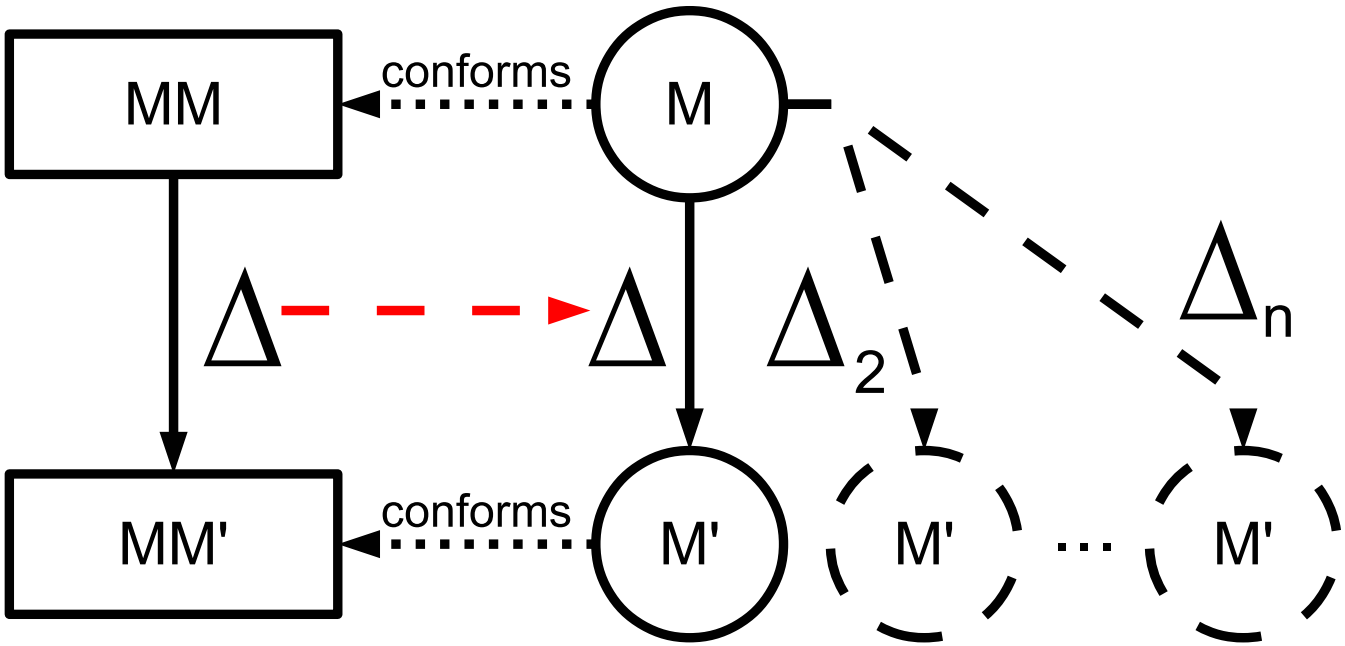

- Fixed strategy to determine model update

Ambiguous Co-Evolution

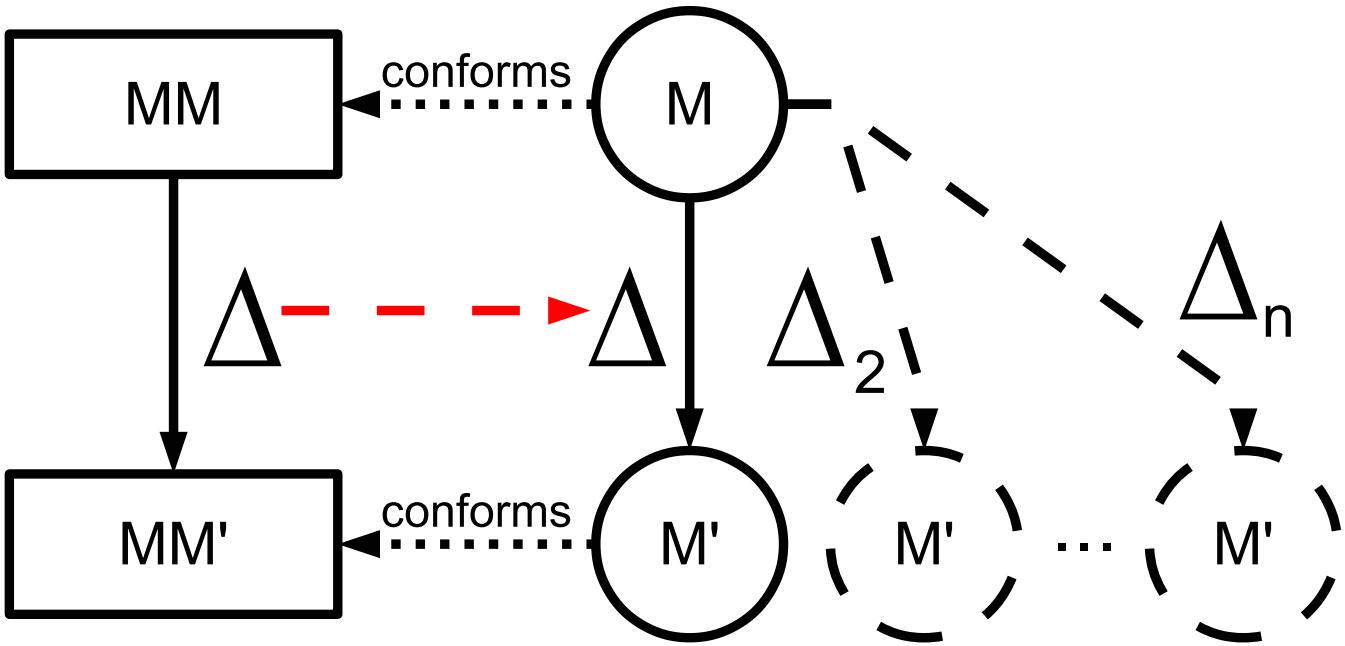

- Fixed strategy to determine model update
- One solution chosen automatically

Ambiguous Co-Evolution

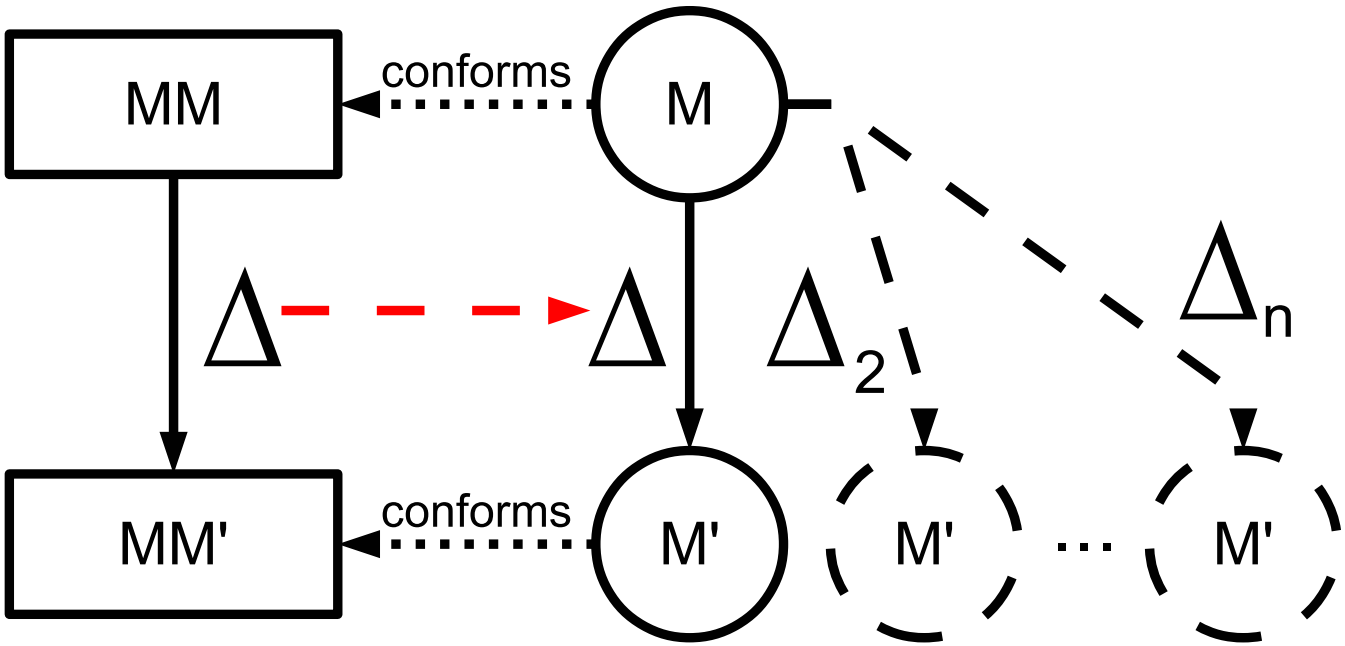

- Fixed strategy to determine model update
- One solution chosen automatically
- May produce unintended model

Ambiguous Co-Evolution Example

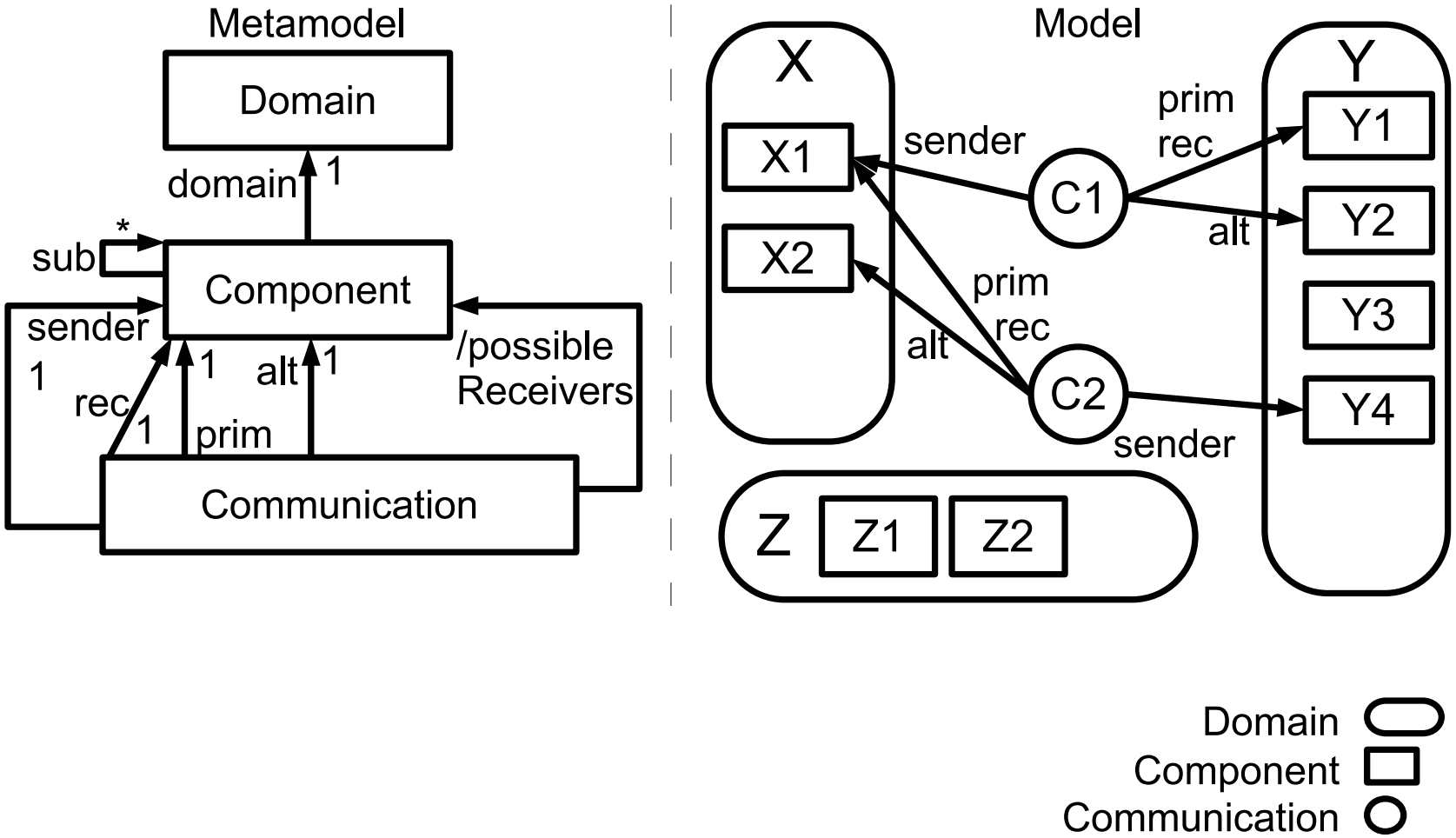

Ambiguous Co-Evolution Example

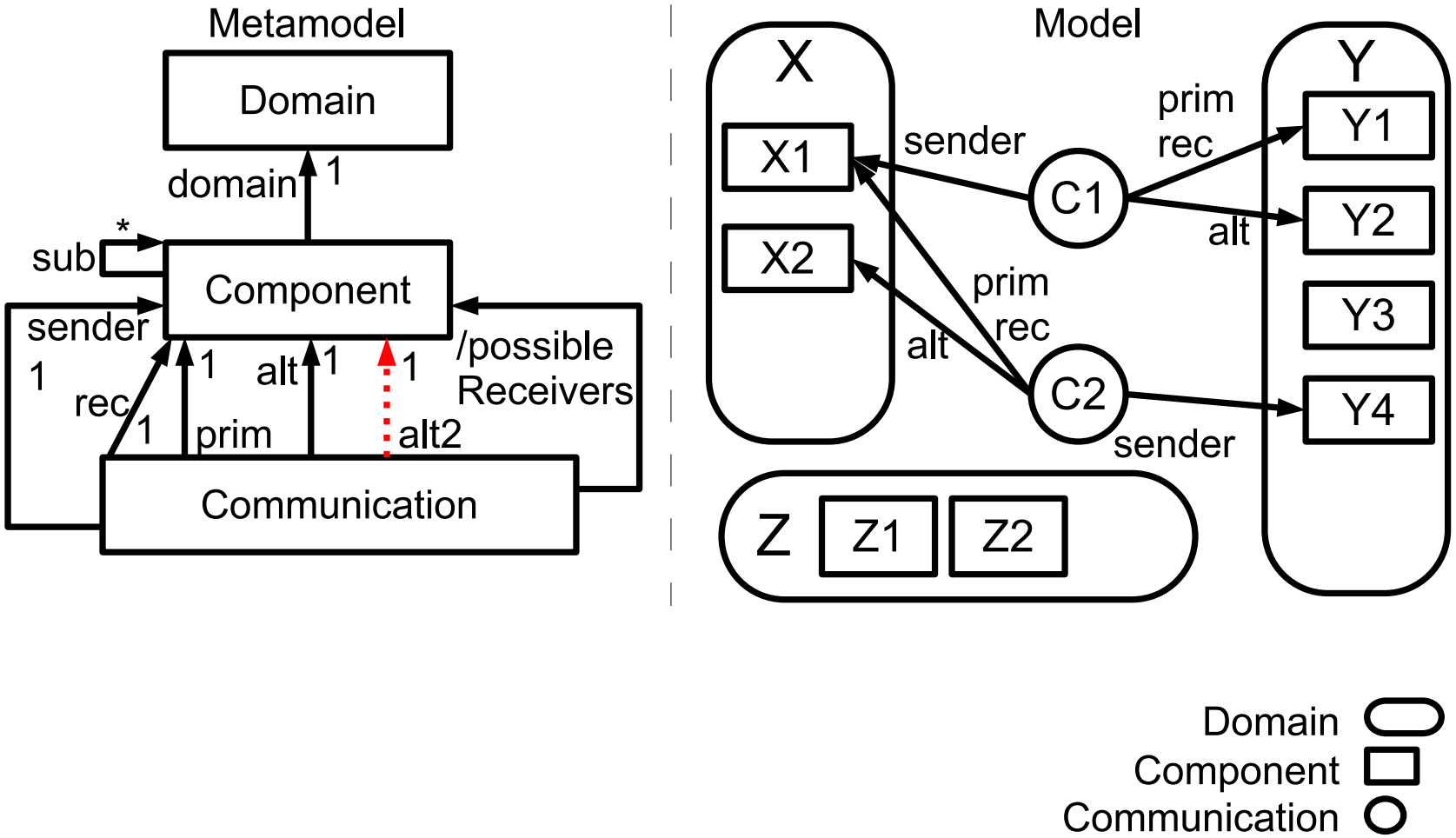

Ambiguous Co-Evolution Example

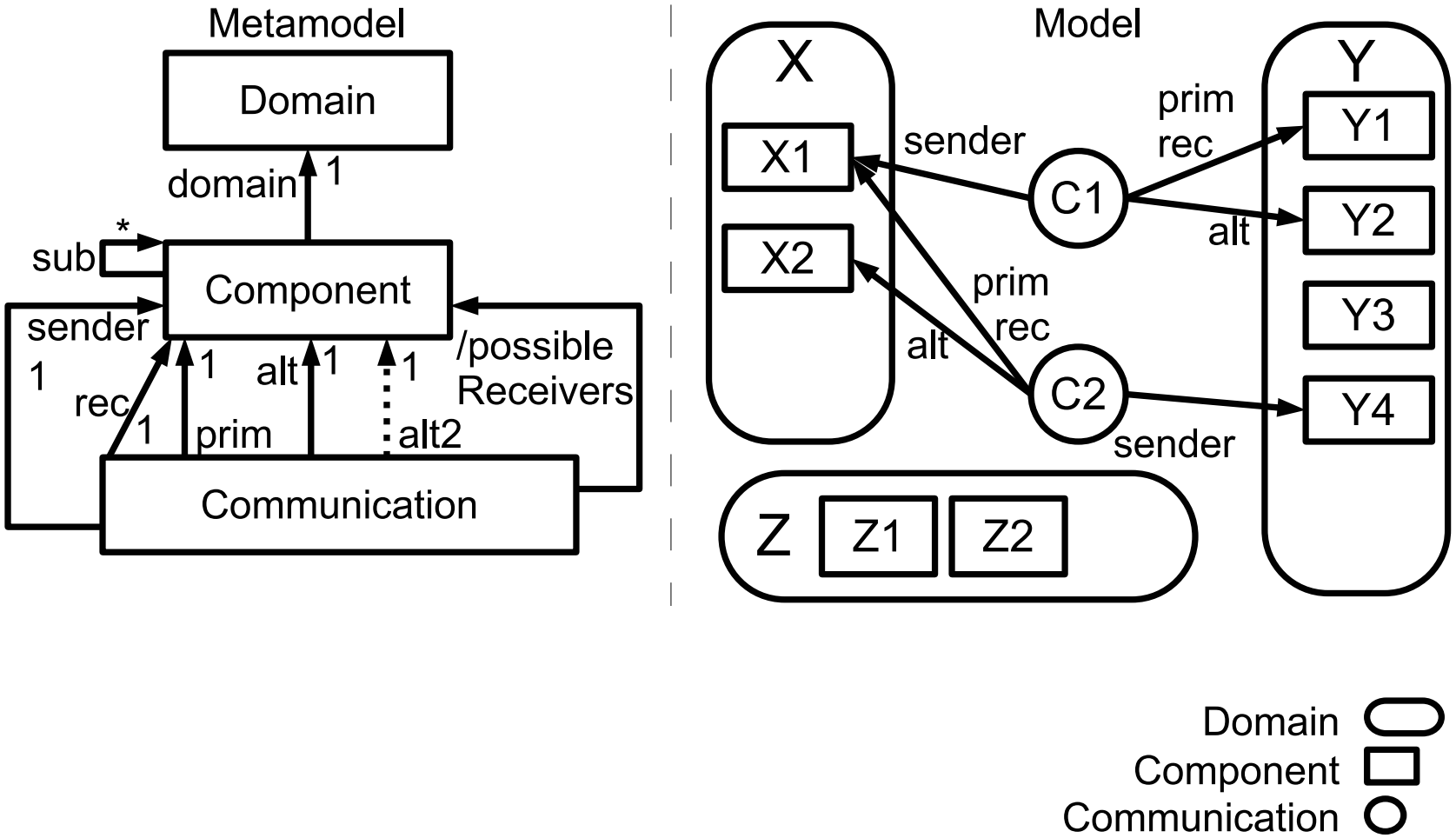

Ambiguous Co-Evolution Example

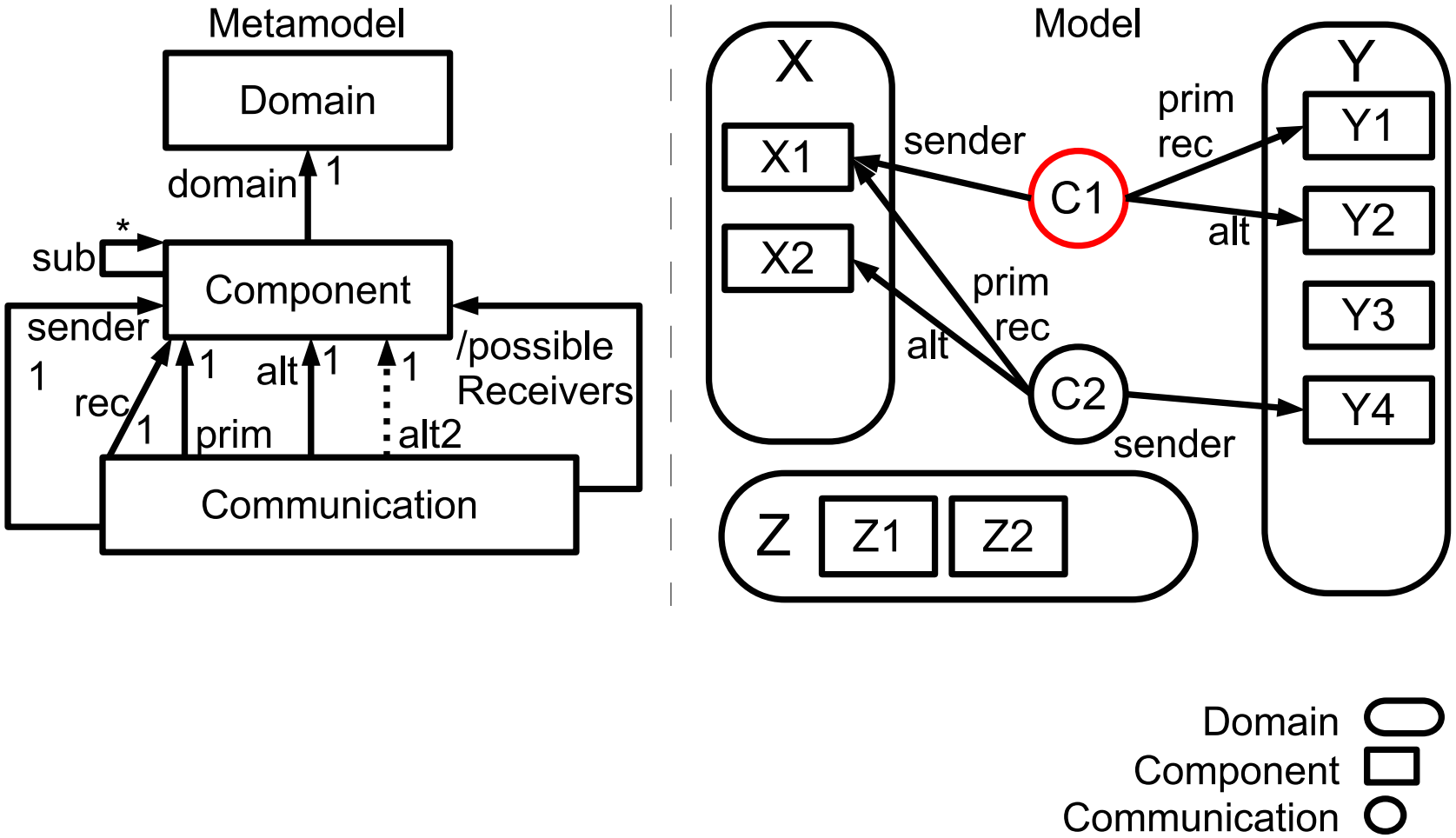

Ambiguous Co-Evolution Example

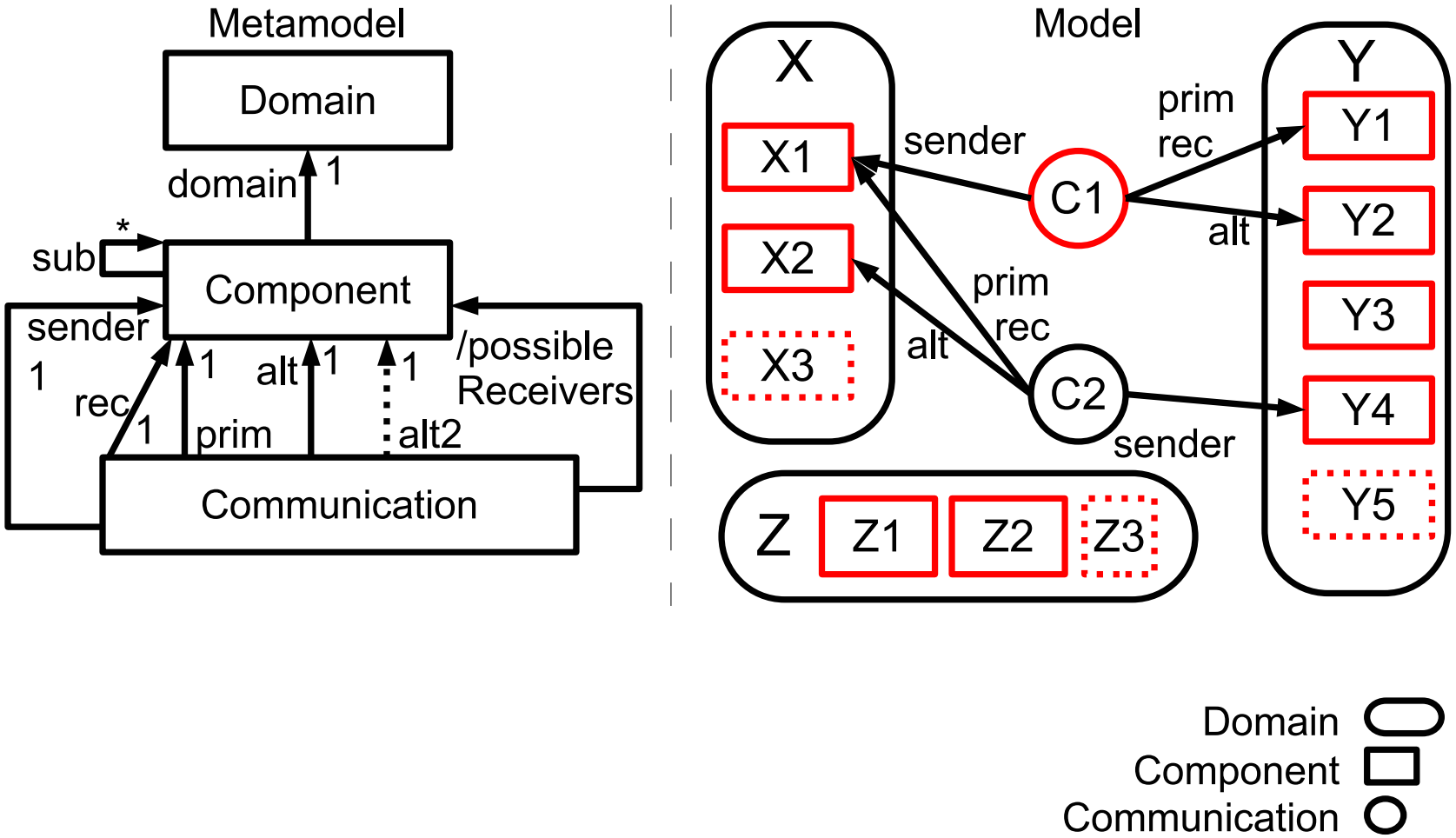

Co-Evolution through Consistent Change Propagation

Co-Evolution through Consistent Change Propagation

1. Detect co-evolution failure

Co-Evolution through Consistent Change Propagation

1. Detect co-evolution failure
   - Missing or incorrect co-evolution

Co-Evolution through Consistent Change Propagation

1. Detect co-evolution failure
   - Missing or incorrect co-evolution
   - Through continuous consistency checking and incremental rule management

Co-Evolution through Consistent Change Propagation

1. Detect co-evolution failure
   - Missing or incorrect co-evolution
   - Through continuous consistency checking and incremental rule management
2. Ensure correct co-evolution

Co-Evolution through Consistent Change Propagation

1. Detect co-evolution failure
   - Missing or incorrect co-evolution
   - Through continuous consistency checking and incremental rule management
2. Ensure correct co-evolution
   - Provide user guidance to find suitable adaptations

Co-Evolution through Consistent Change Propagation

1. Detect co-evolution failure
   - Missing or incorrect co-evolution
   - Through continuous consistency checking and incremental rule management
2. Ensure correct co-evolution
   - Provide user guidance to find suitable adaptations
   - Execute desired adaptations and update model

Consistent Co-Evolution

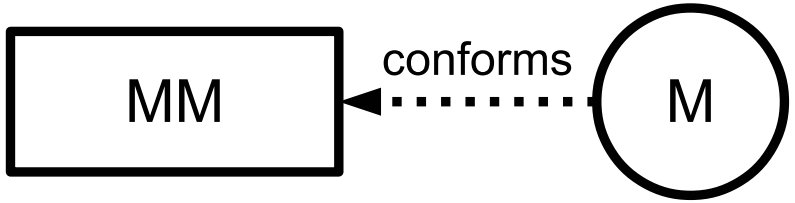

Consistent Co-Evolution

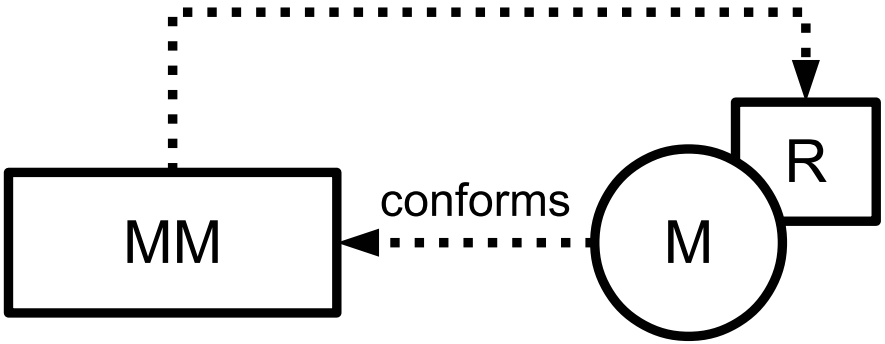

Consistent Co-Evolution

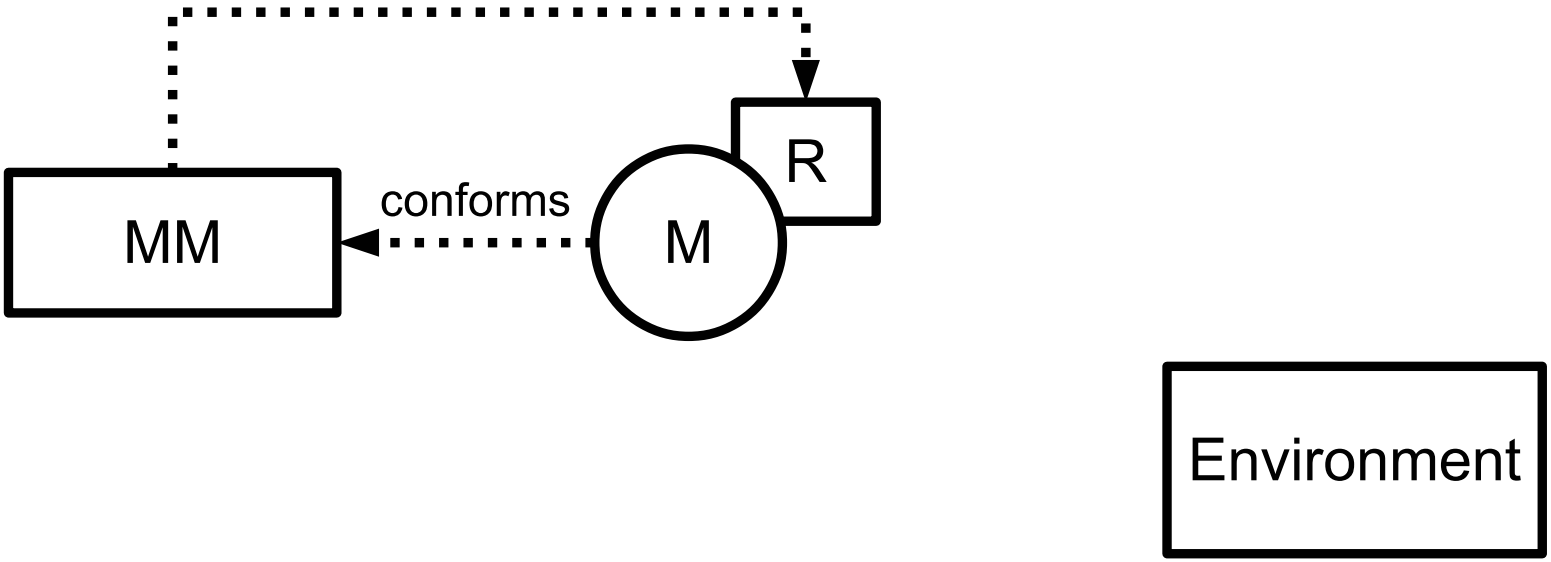

Consistent Co-Evolution

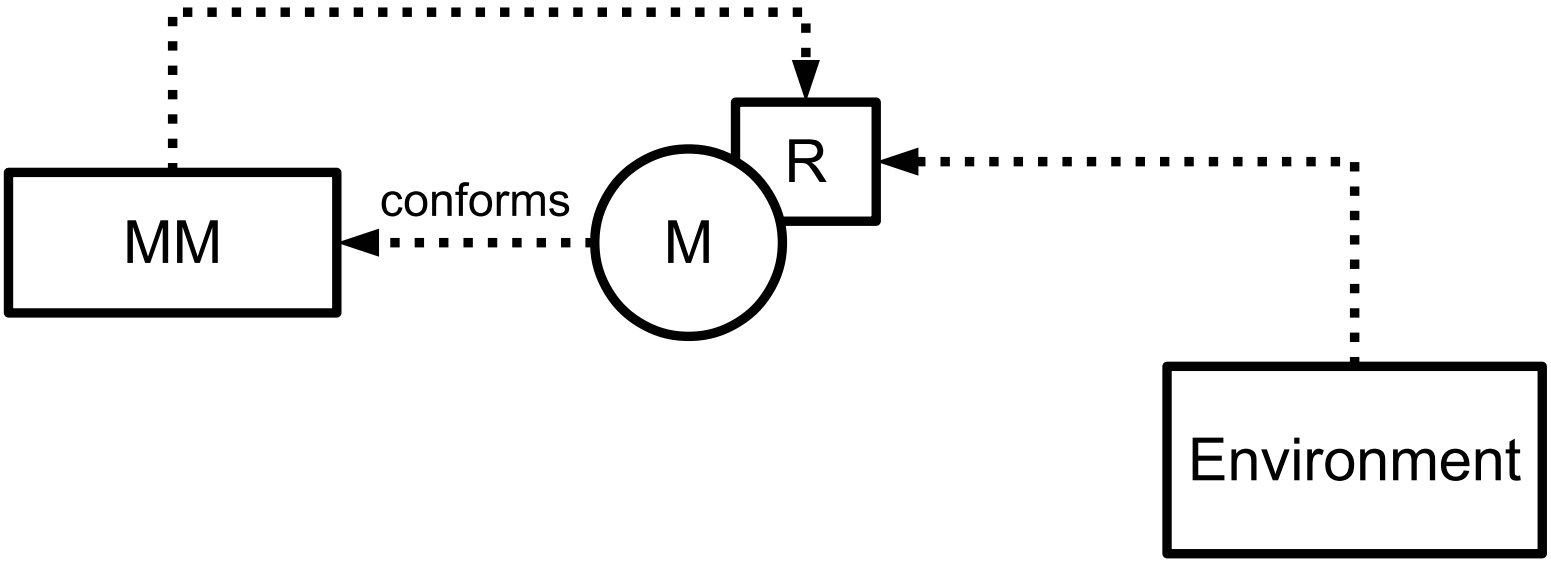

Consistent Co-Evolution

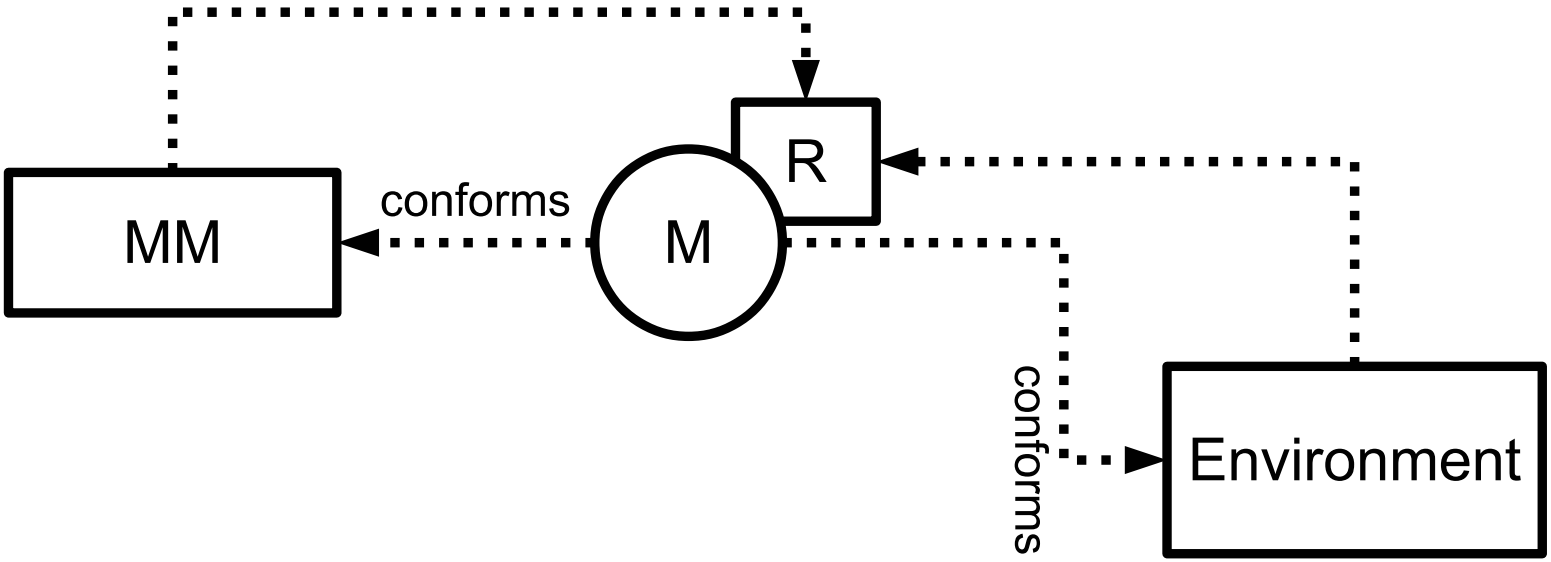

Consistent Co-Evolution

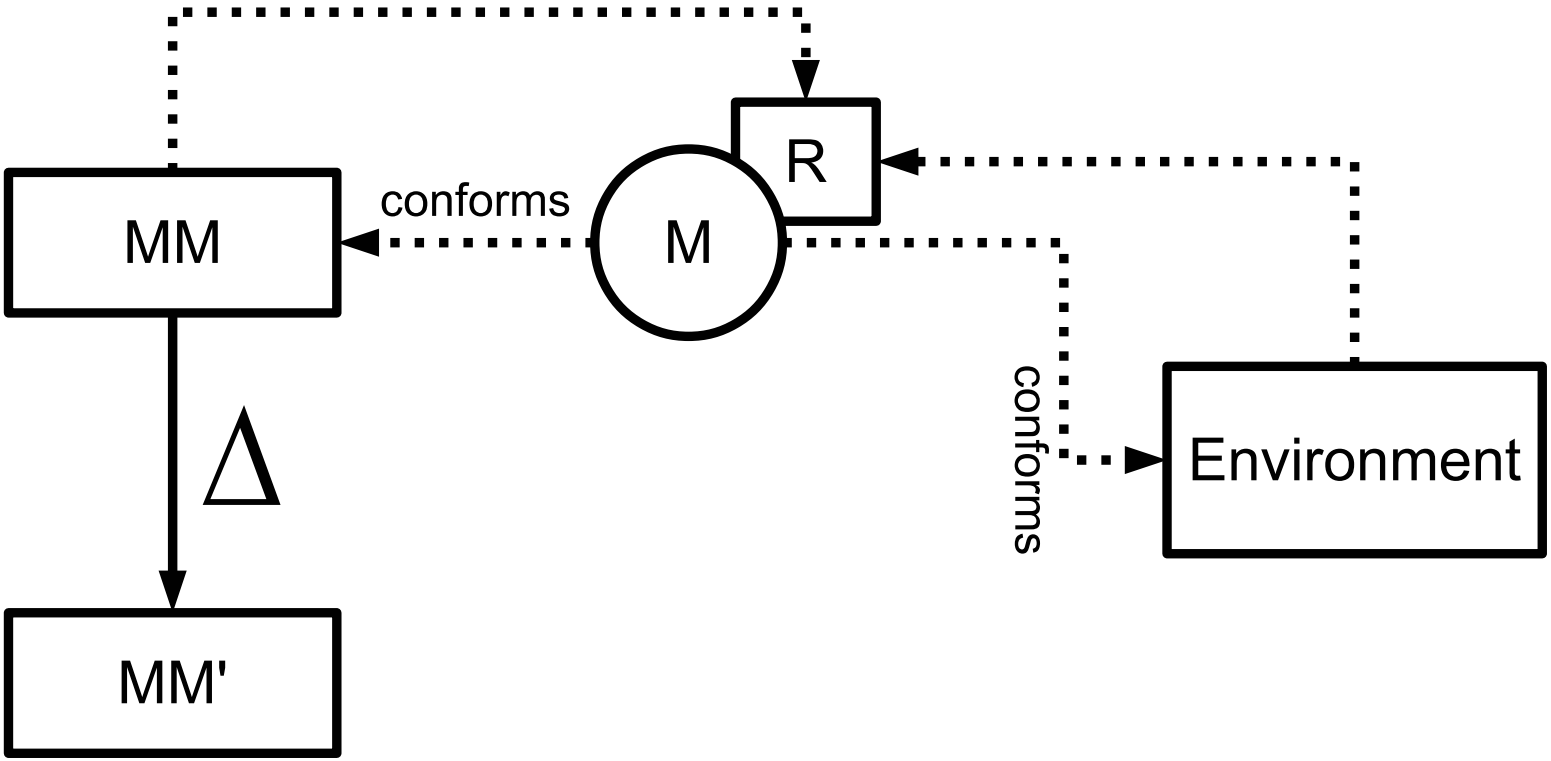

Consistent Co-Evolution

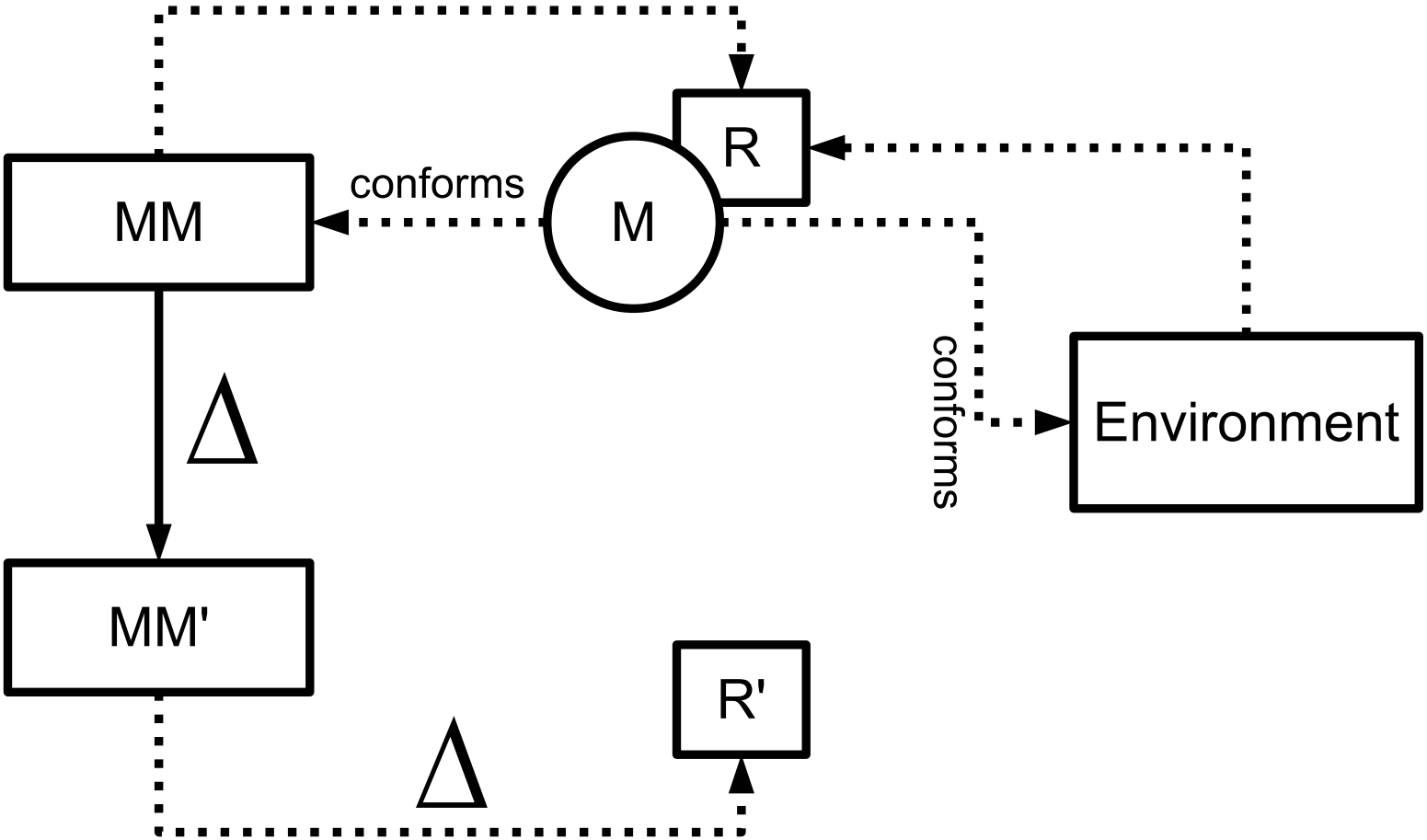

Consistent Co-Evolution

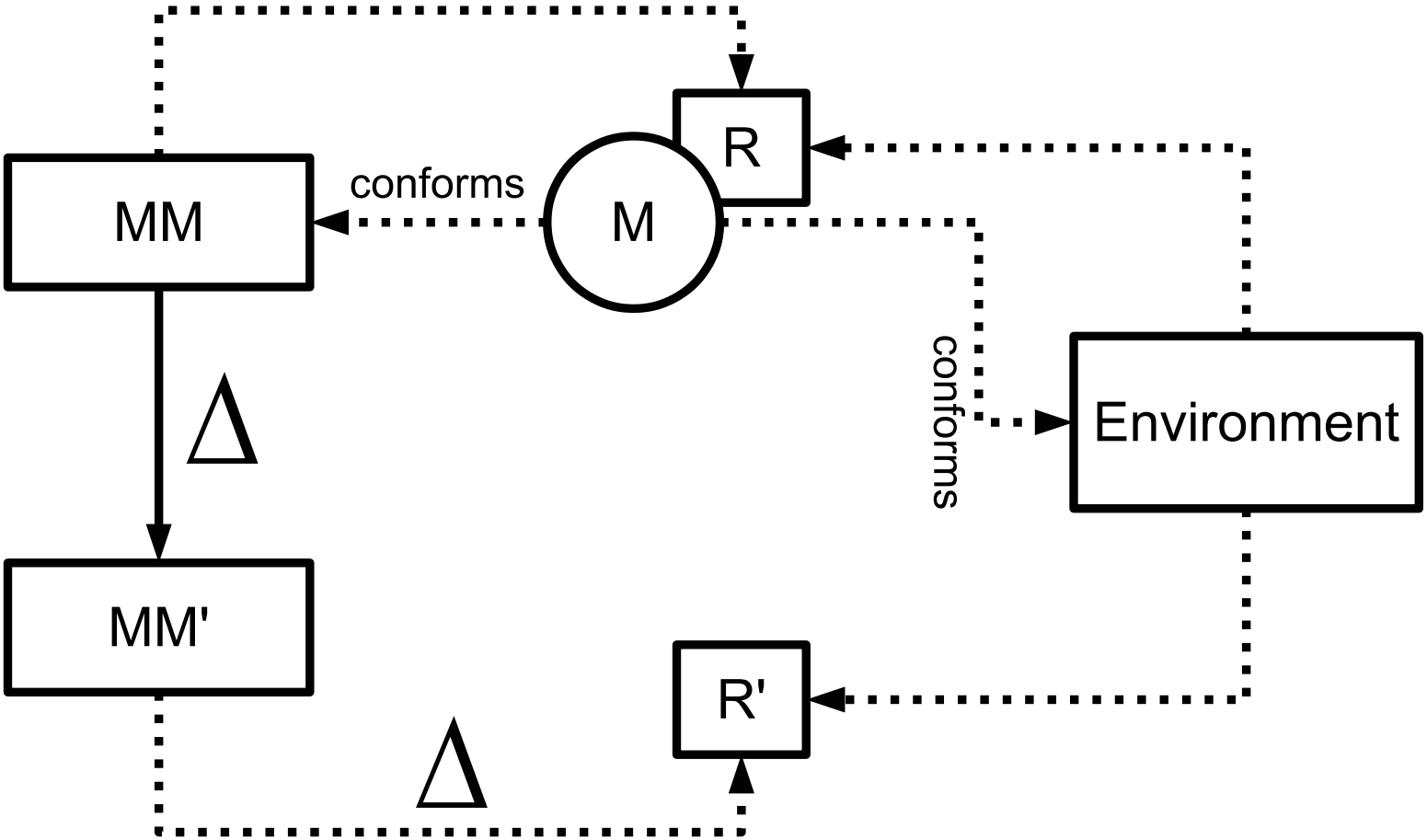

Consistent Co-Evolution

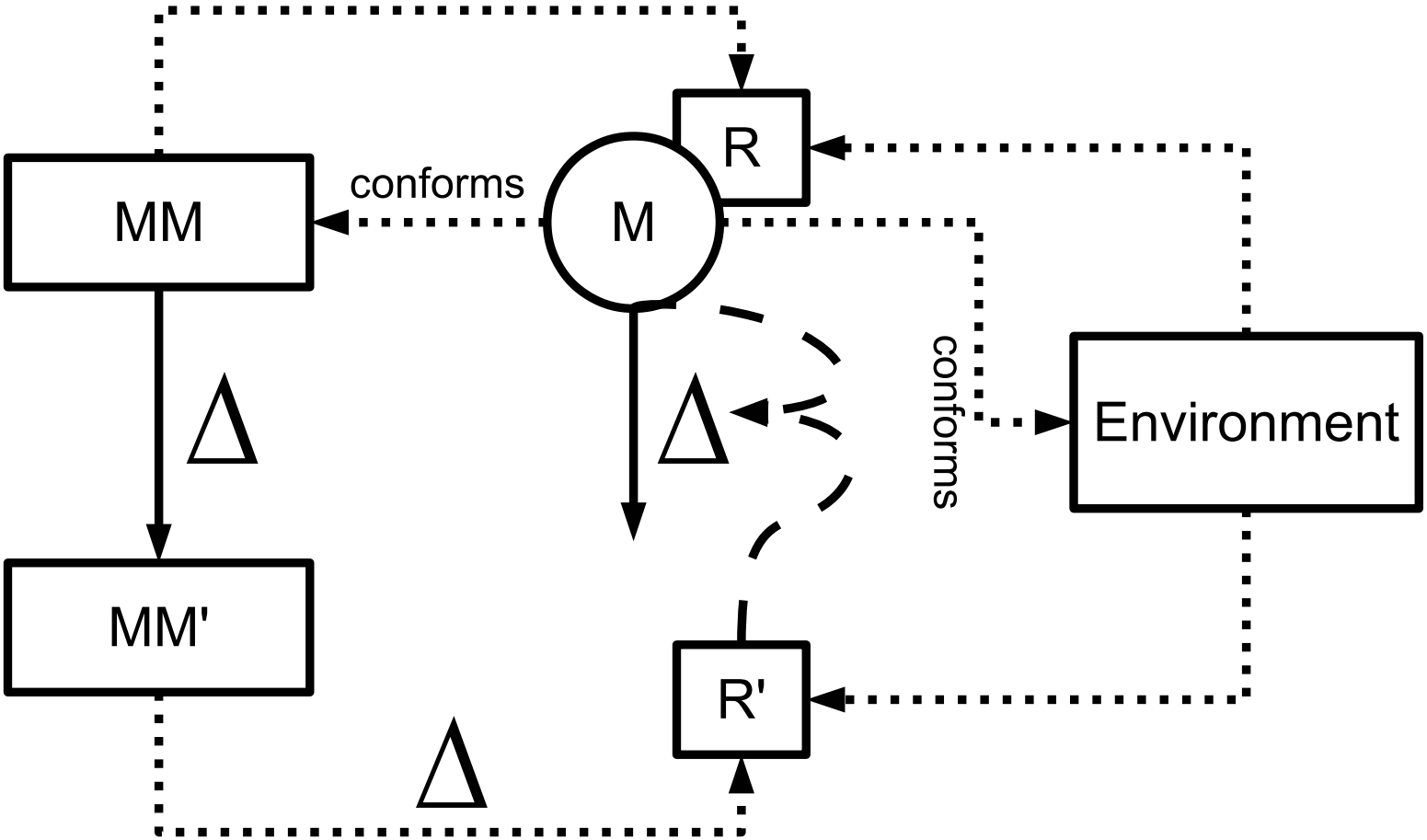

Consistent Co-Evolution

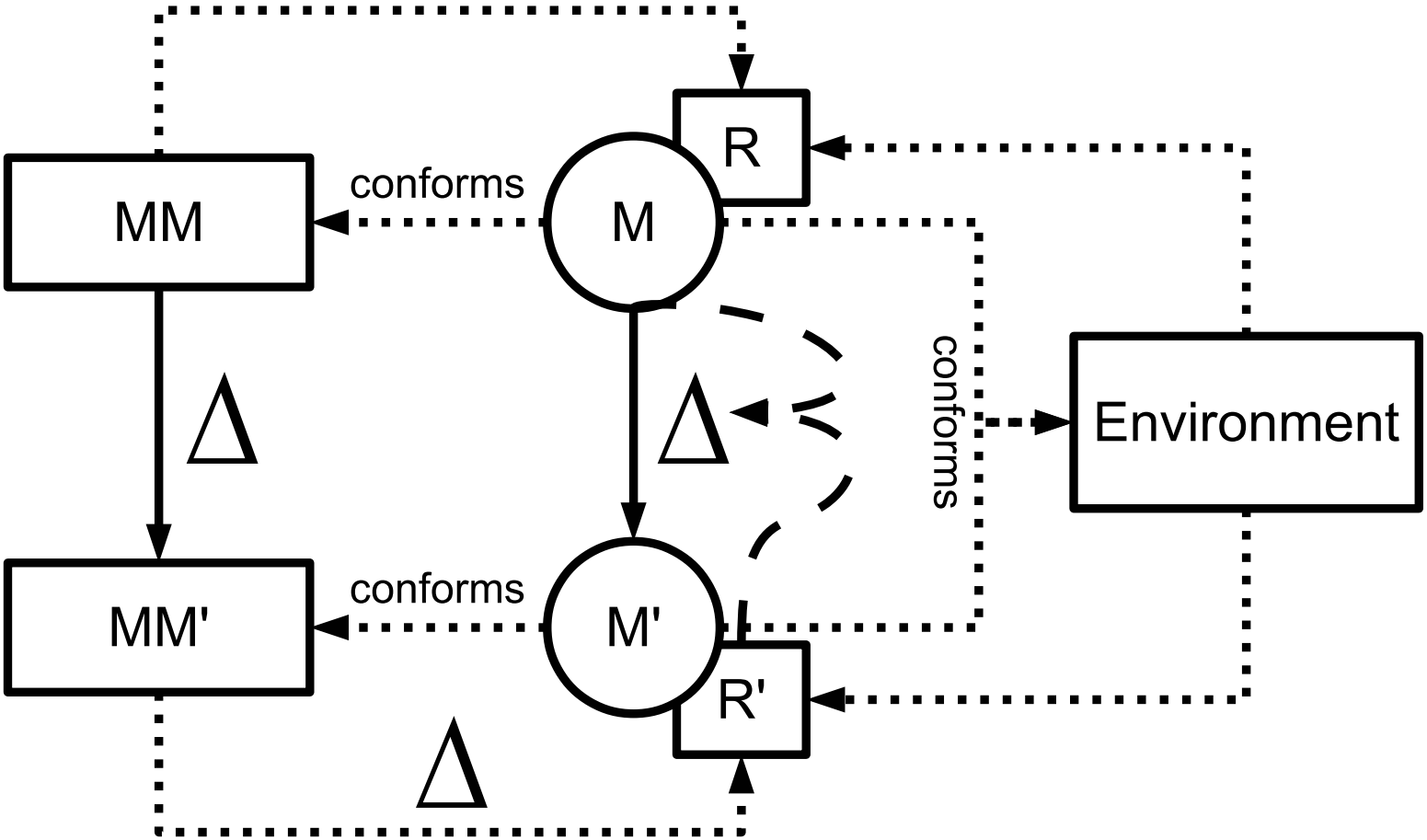

Consistent Co-Evolution Example

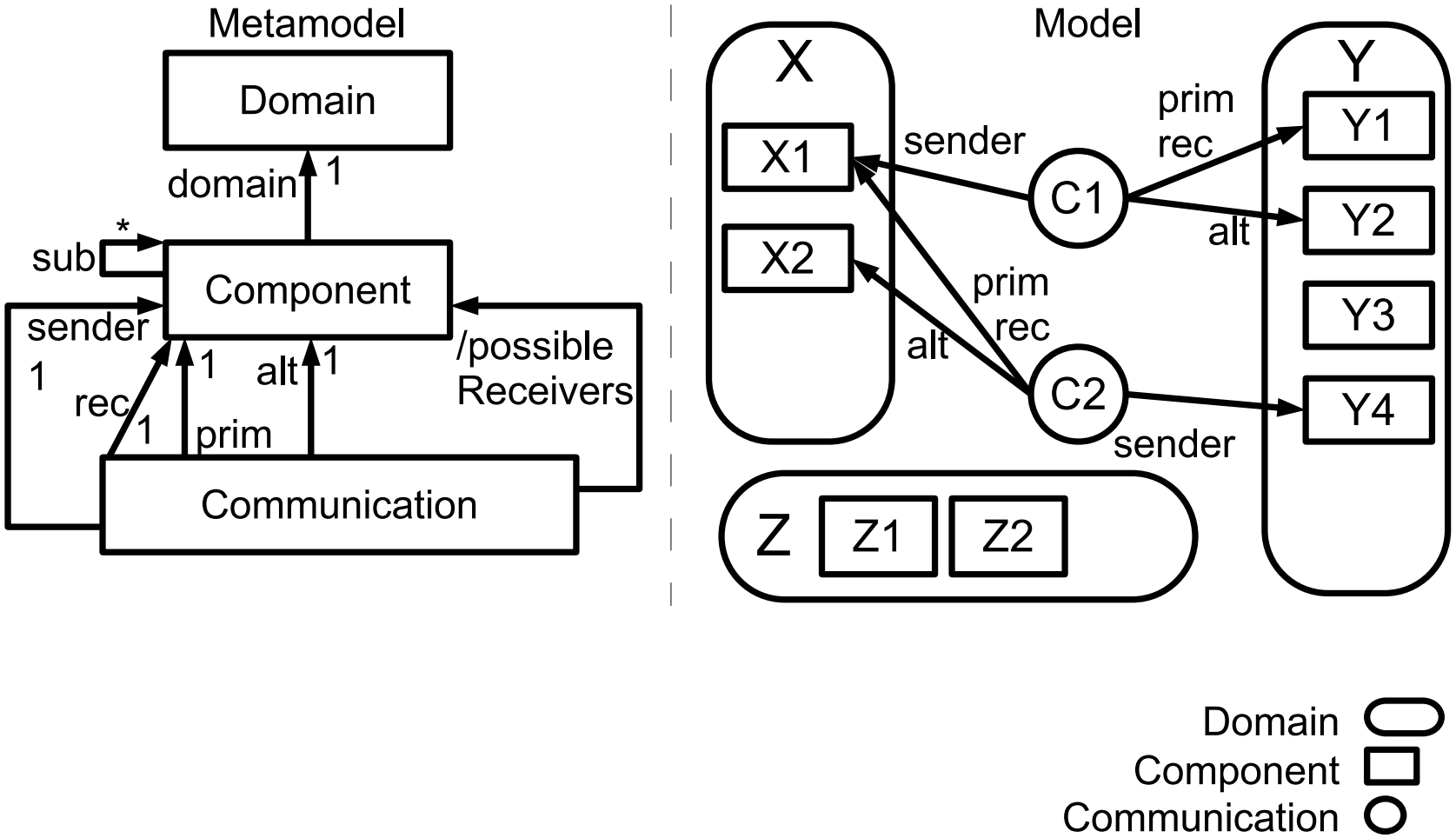

Consistent Co-Evolution Example

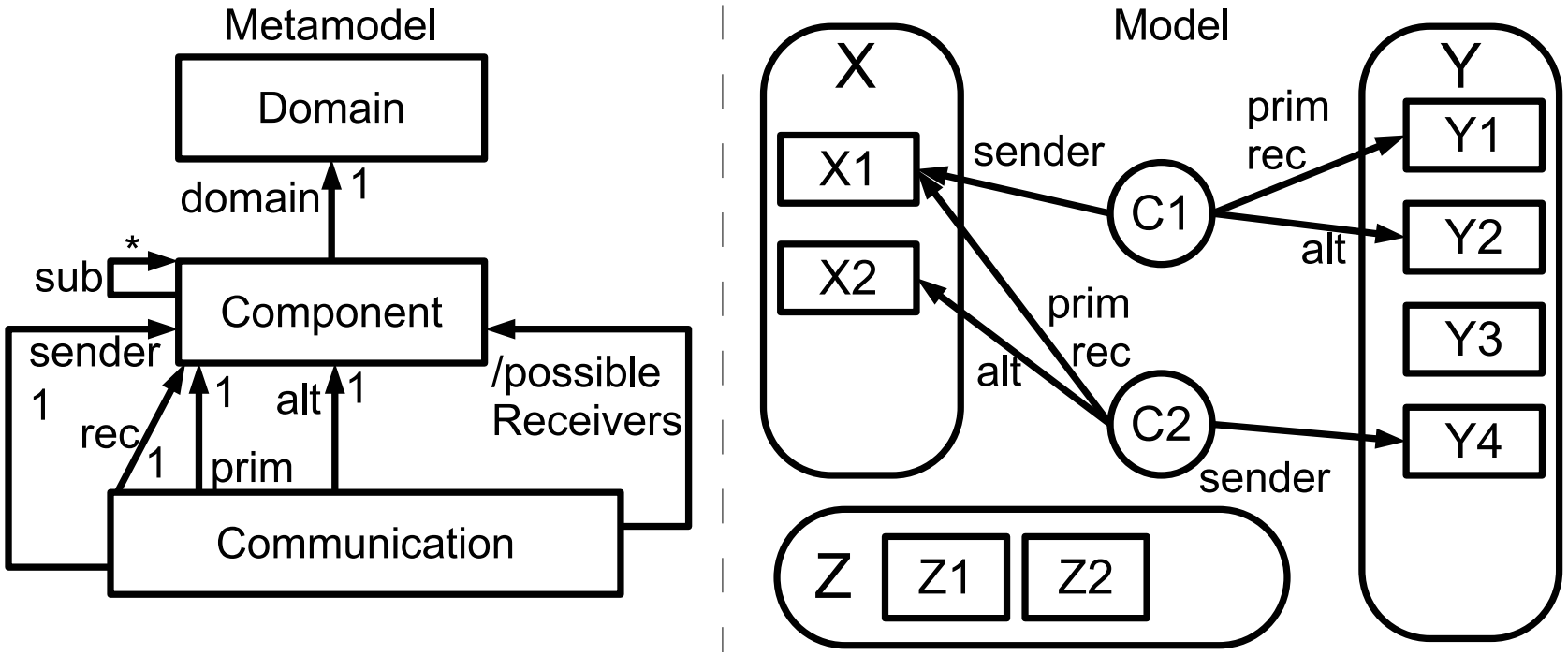

R1: Possible receivers must belong to same domain.
R2: Communication only between distinct domains.
R3: Possible receivers must be distinct.

Domain
Component
Communication

Consistent Co-Evolution Example

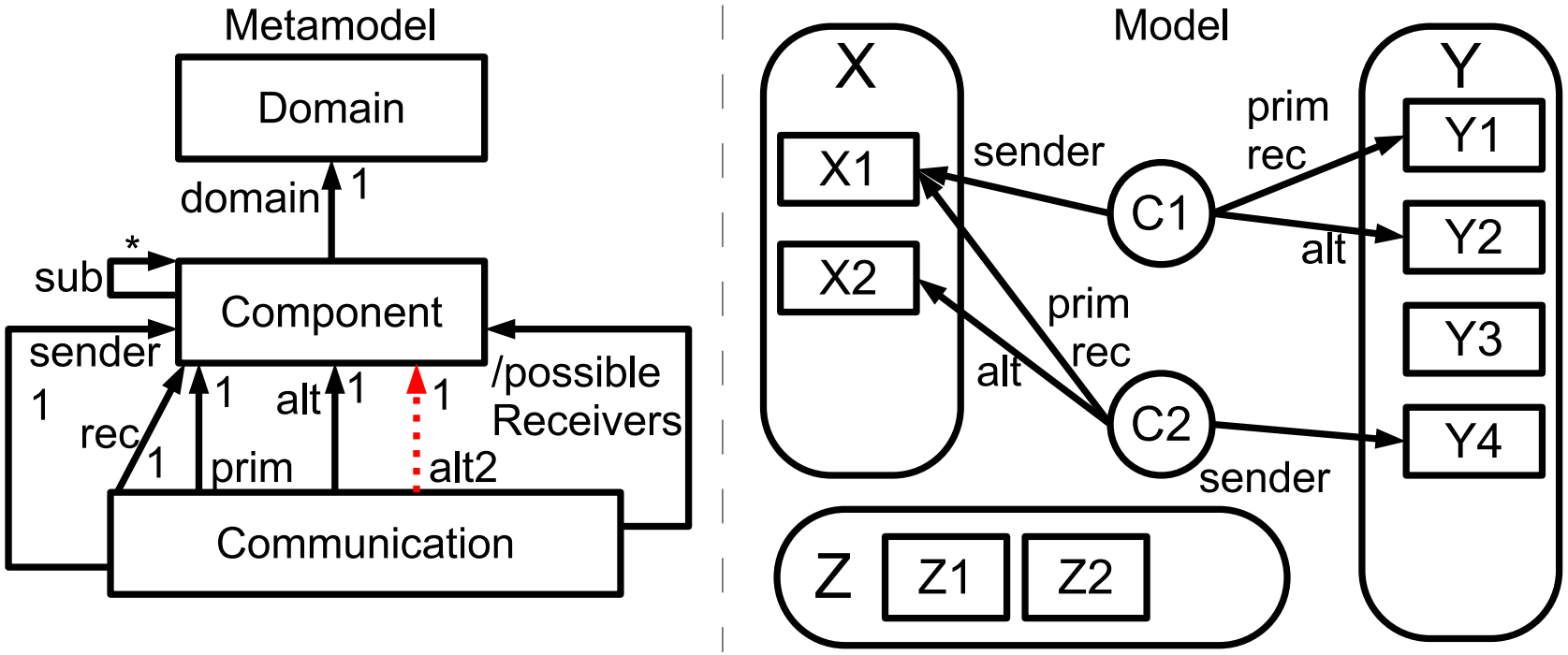

R1: Possible receivers must belong to same domain.
R2: Communication only between distinct domains.
R3: Possible receivers must be distinct.
R4*: Communications must provide alt2.

Domain
Component
Communication

Consistent Co-Evolution Example

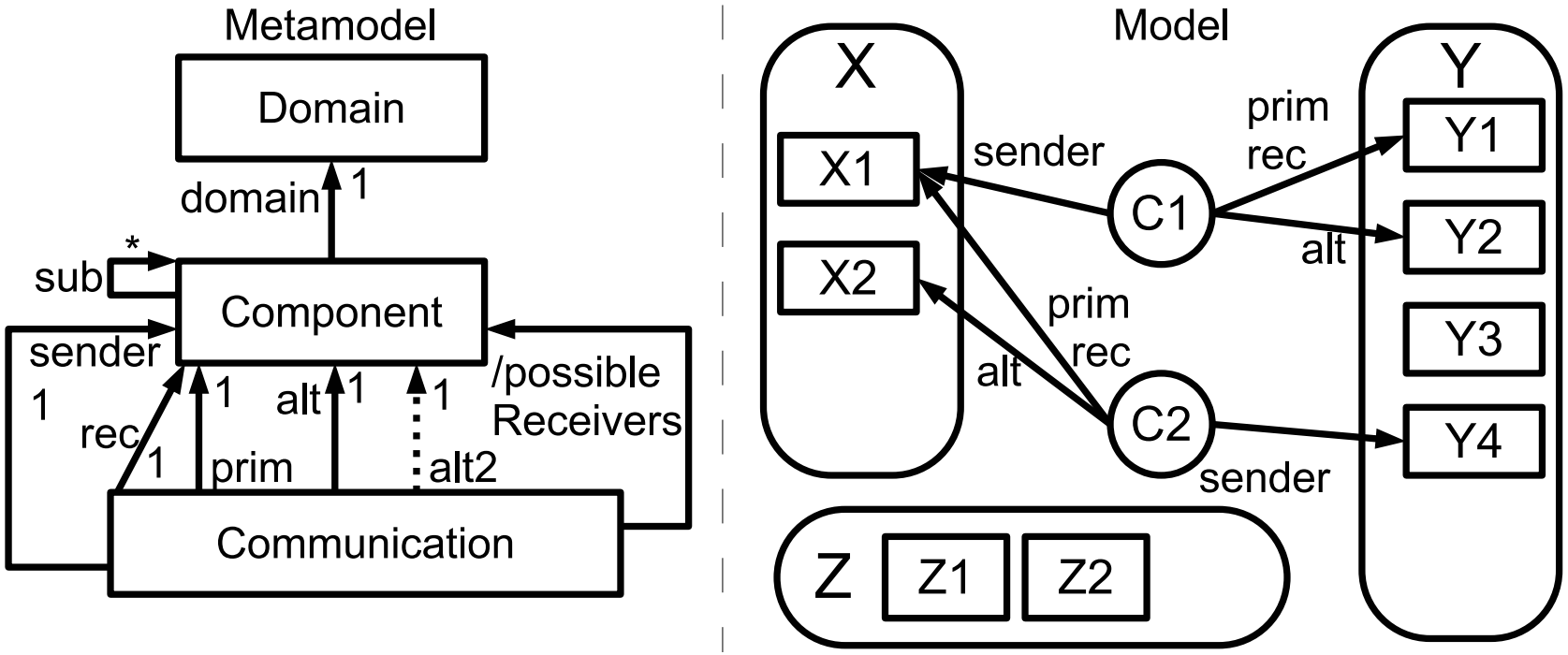

R1: Possible receivers must belong to same domain.
R2: Communication only between distinct domains.
R3: Possible receivers must be distinct.
R4*: Communications must provide alt2.

Domain
Component
Communication

Consistent Co-Evolution Example

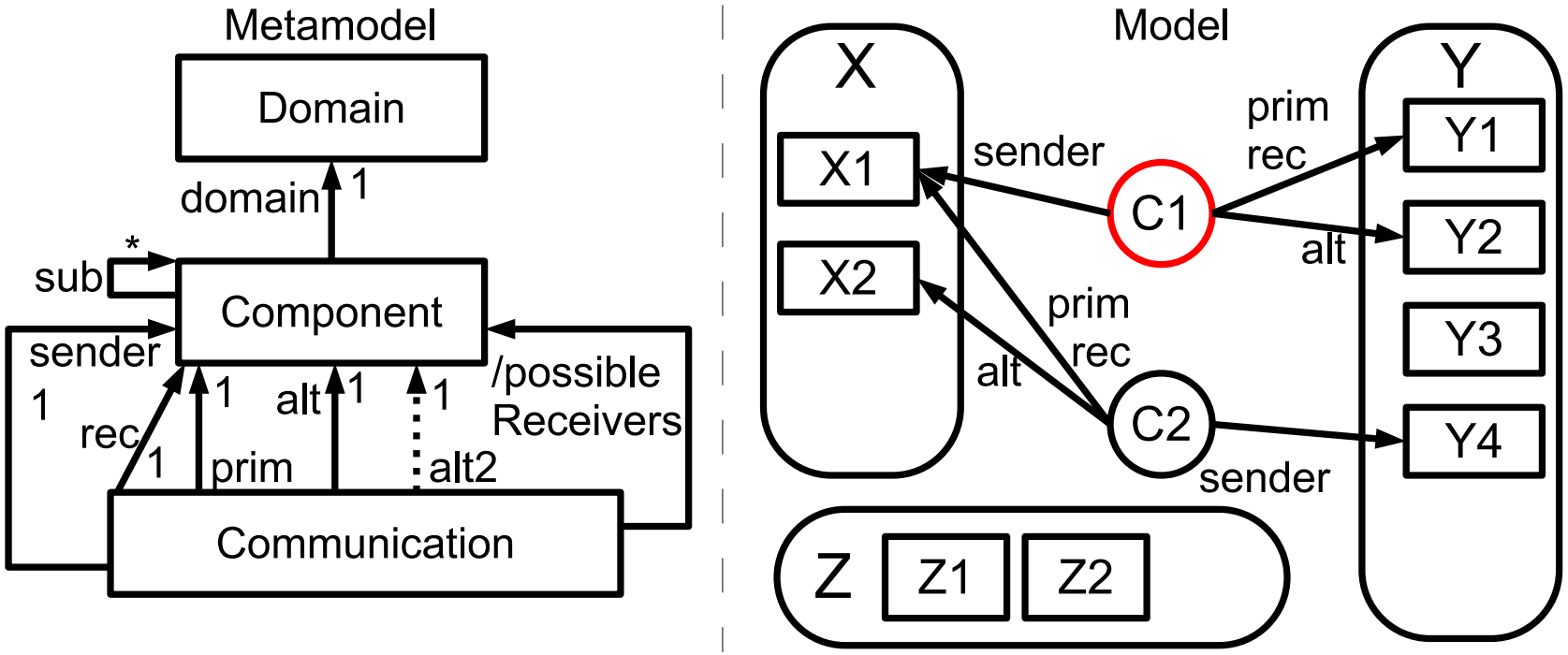

R1: Possible receivers must belong to same domain.
R2: Communication only between distinct domains.
R3: Possible receivers must be distinct.
R4*: Communications must provide alt2.

Domain
Component
Communication

Consistent Co-Evolution Example

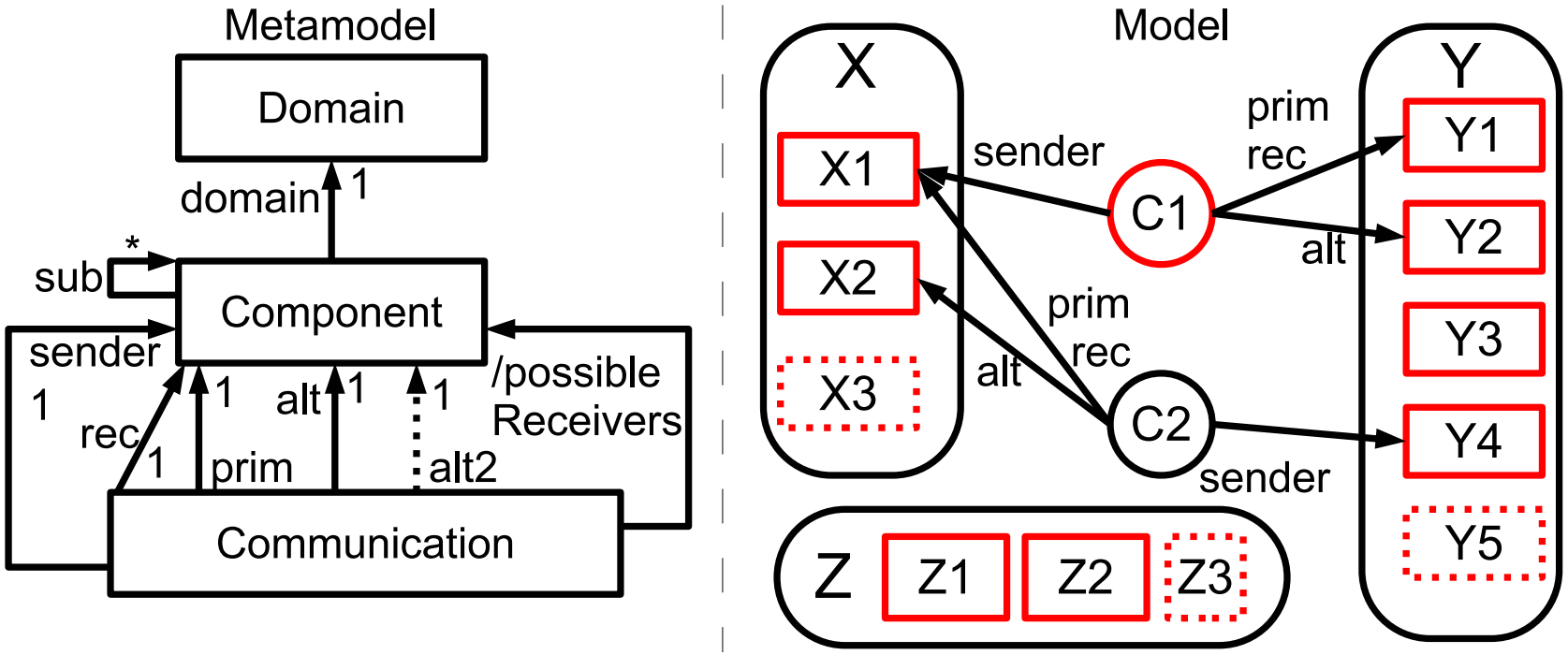

R1: Possible receivers must belong to same domain.
R2: Communication only between distinct domains.
R3: Possible receivers must be distinct.
R4*: Communications must provide alt2.

Domain
Component
Communication

Consistent Co-Evolution Example

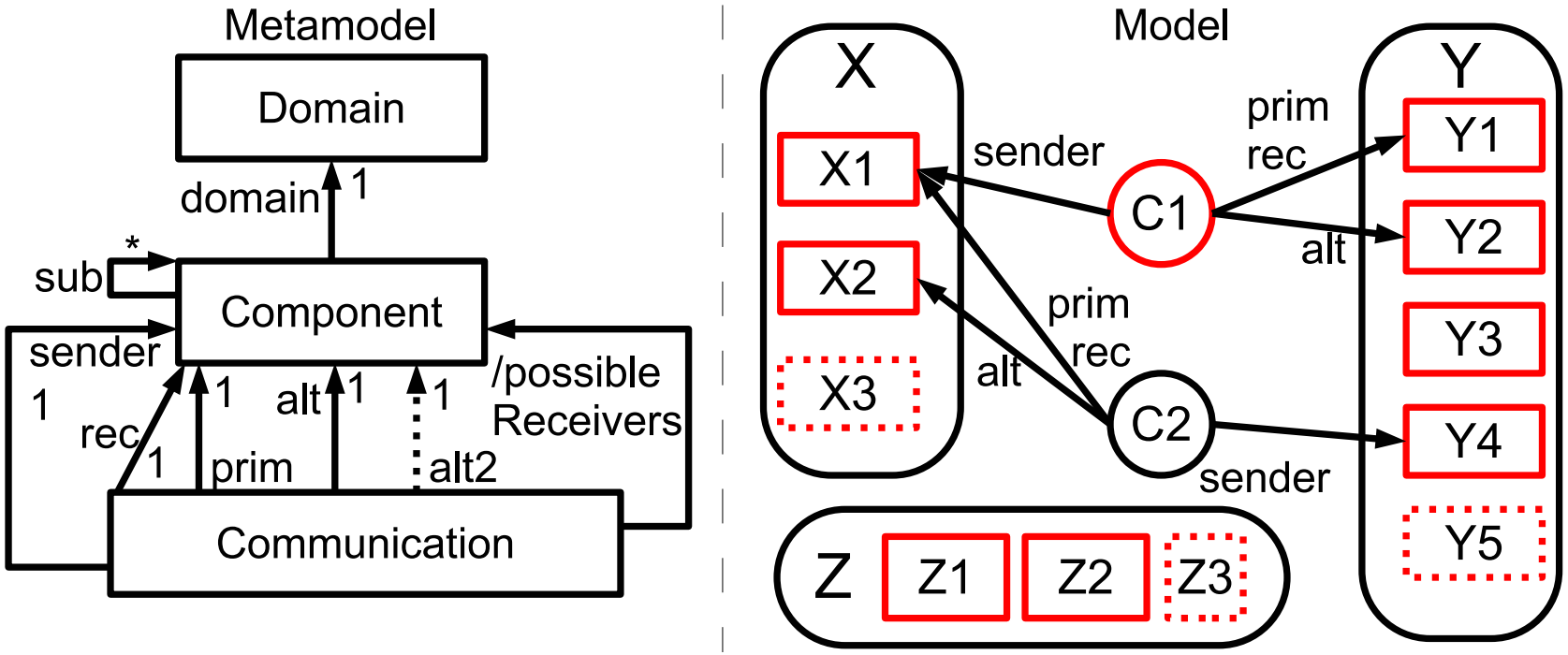

R1: Possible receivers must belong to same domain.
R2: Communication only between distinct domains.
R3: Possible receivers must be distinct.
R4*: Communications must provide alt2.

Domain
Component
Communication

Consistent Co-Evolution Example

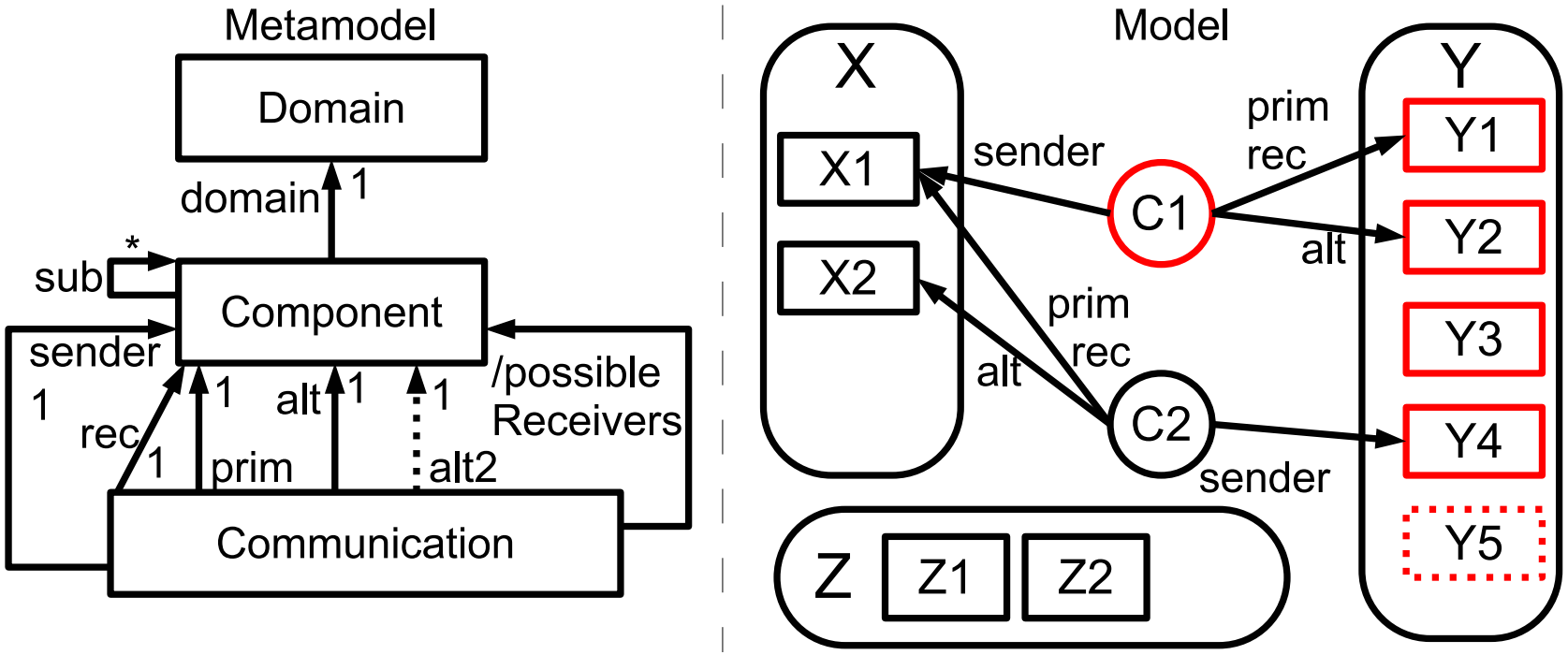

R1: Possible receivers must belong to same domain.
R2: Communication only between distinct domains.
R3: Possible receivers must be distinct.
R4*: Communications must provide alt2.

Domain
Component
Communication

Consistent Co-Evolution Example

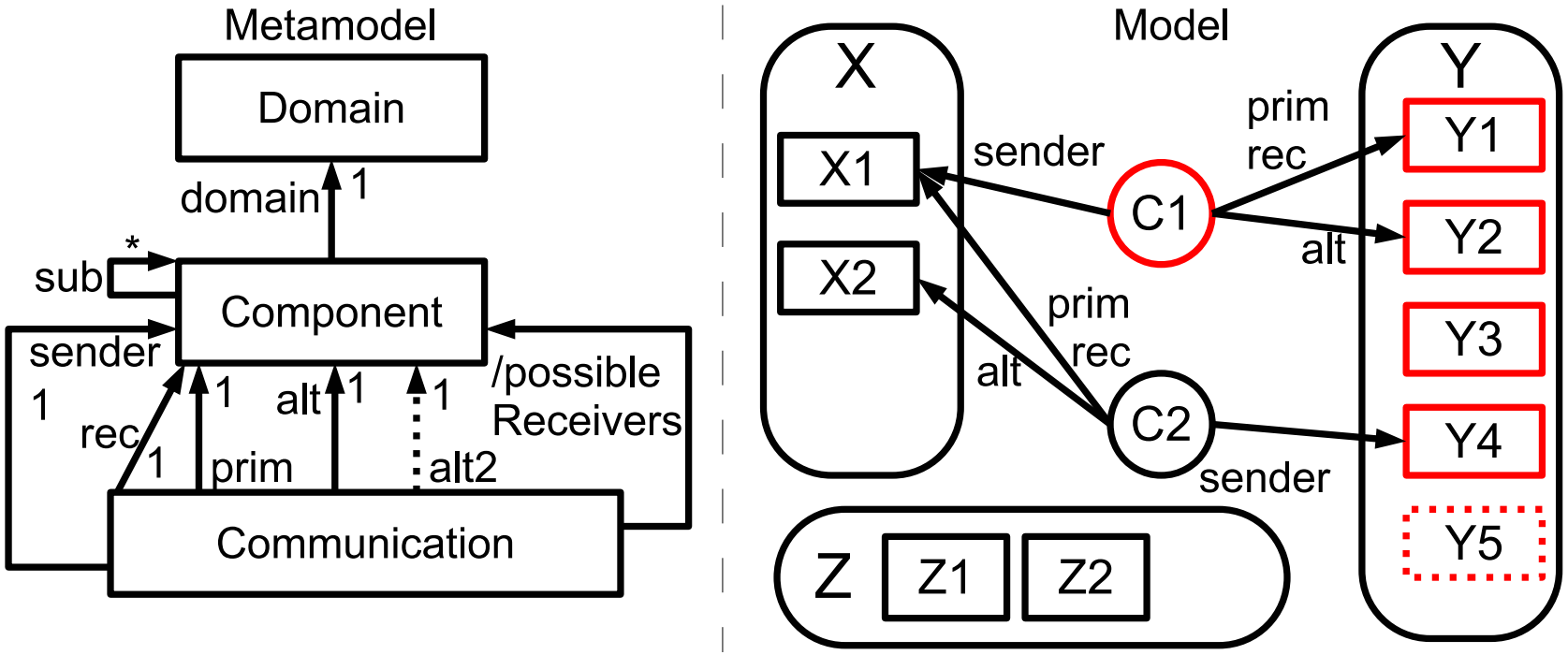

R1: Possible receivers must belong to same domain.
R2: Communication only between distinct domains.
R3: Possible receivers must be distinct.
R4*: Communications must provide alt2.

Domain
Component
Communication

Consistent Co-Evolution Example

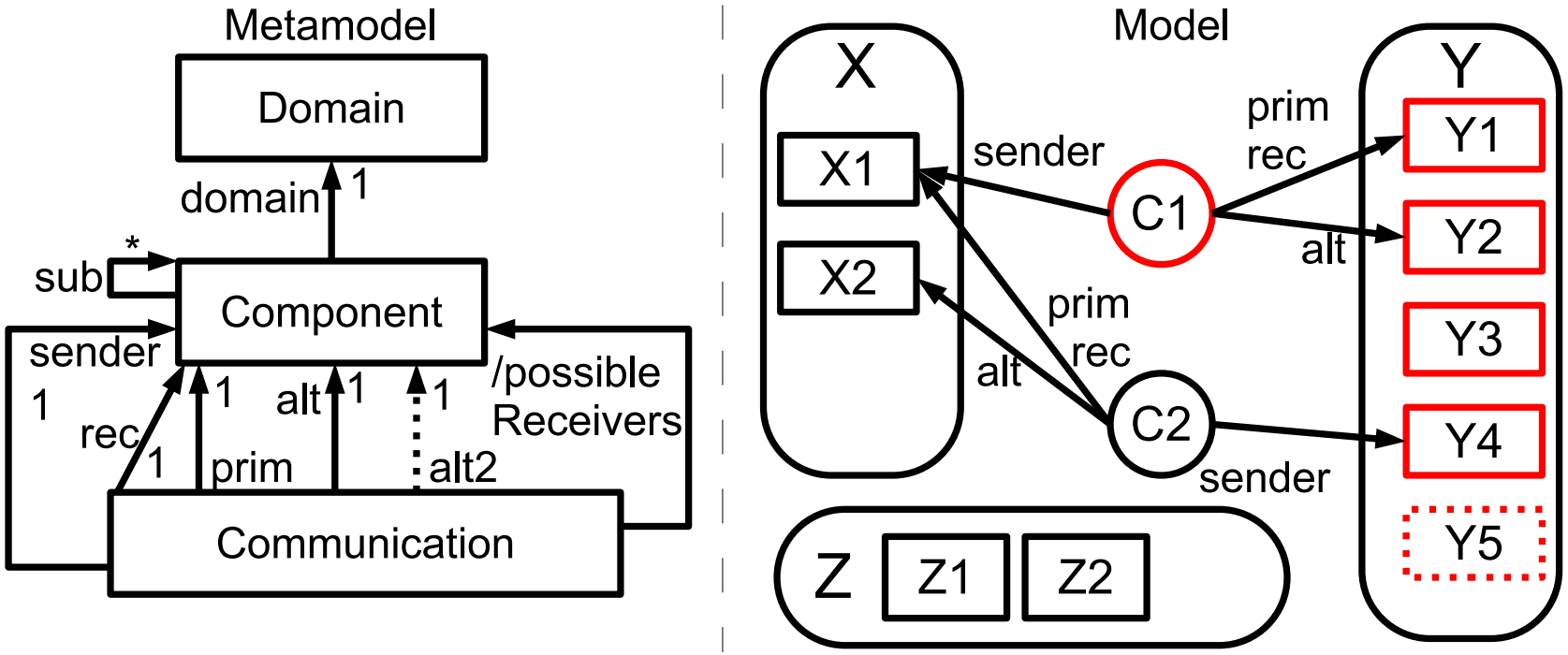

R1: Possible receivers must belong to same domain.
R2: Communication only between distinct domains.
R3: Possible receivers must be distinct.
R4*: Communications must provide alt2.

Domain
Component
Communication

Consistent Co-Evolution Example

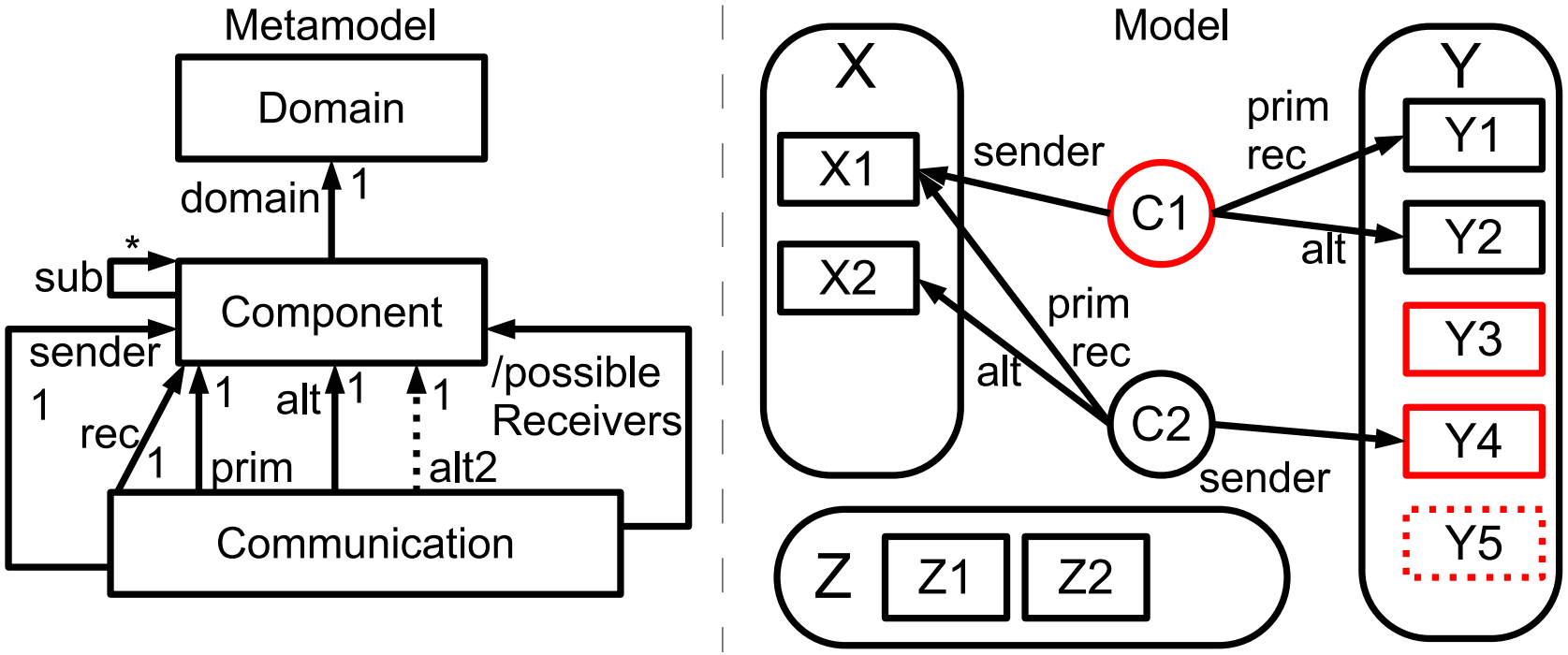

R1: Possible receivers must belong to same domain.
R2: Communication only between distinct domains.
R3: Possible receivers must be distinct.
R4*: Communications must provide alt2.

Domain
Component
Communication

Consistent Co-Evolution Example

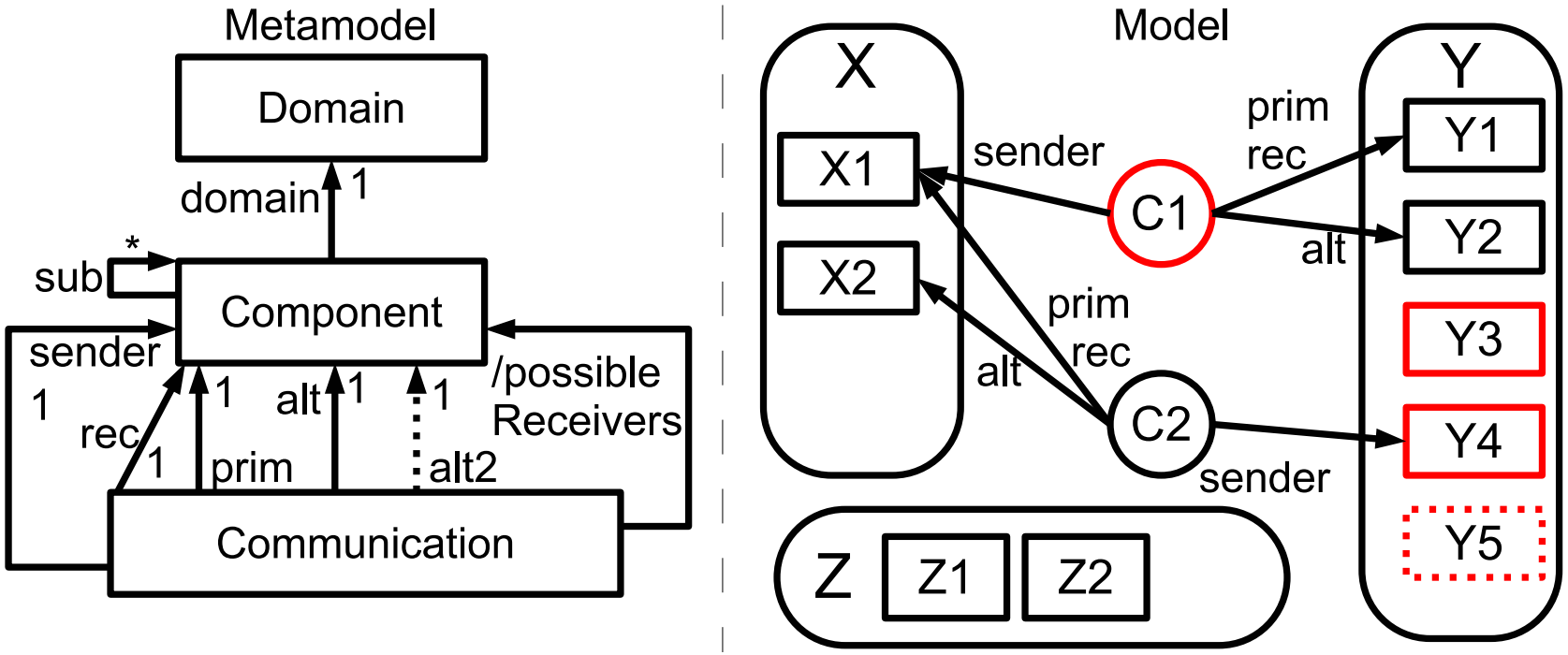

R1: Possible receivers must belong to same domain.
R2: Communication only between distinct domains.
R3: Possible receivers must be distinct.
R4*: Communications must provide alt2.

Domain
Component
Communication

Consistent Co-Evolution Example

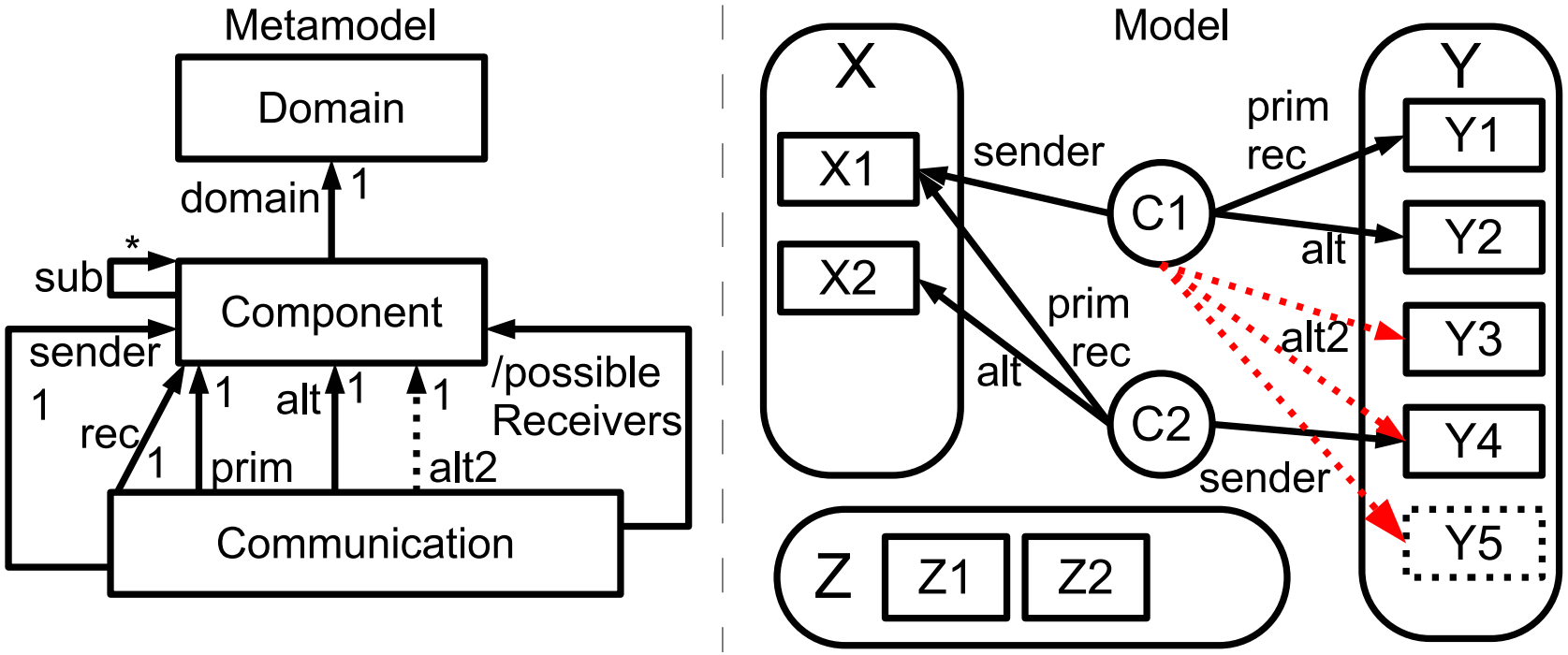

R1: Possible receivers must belong to same domain.
R2: Communication only between distinct domains.
R3: Possible receivers must be distinct.
R4*: Communications must provide alt2.

Domain
Component
Communication

Consistent Co-Evolution Example

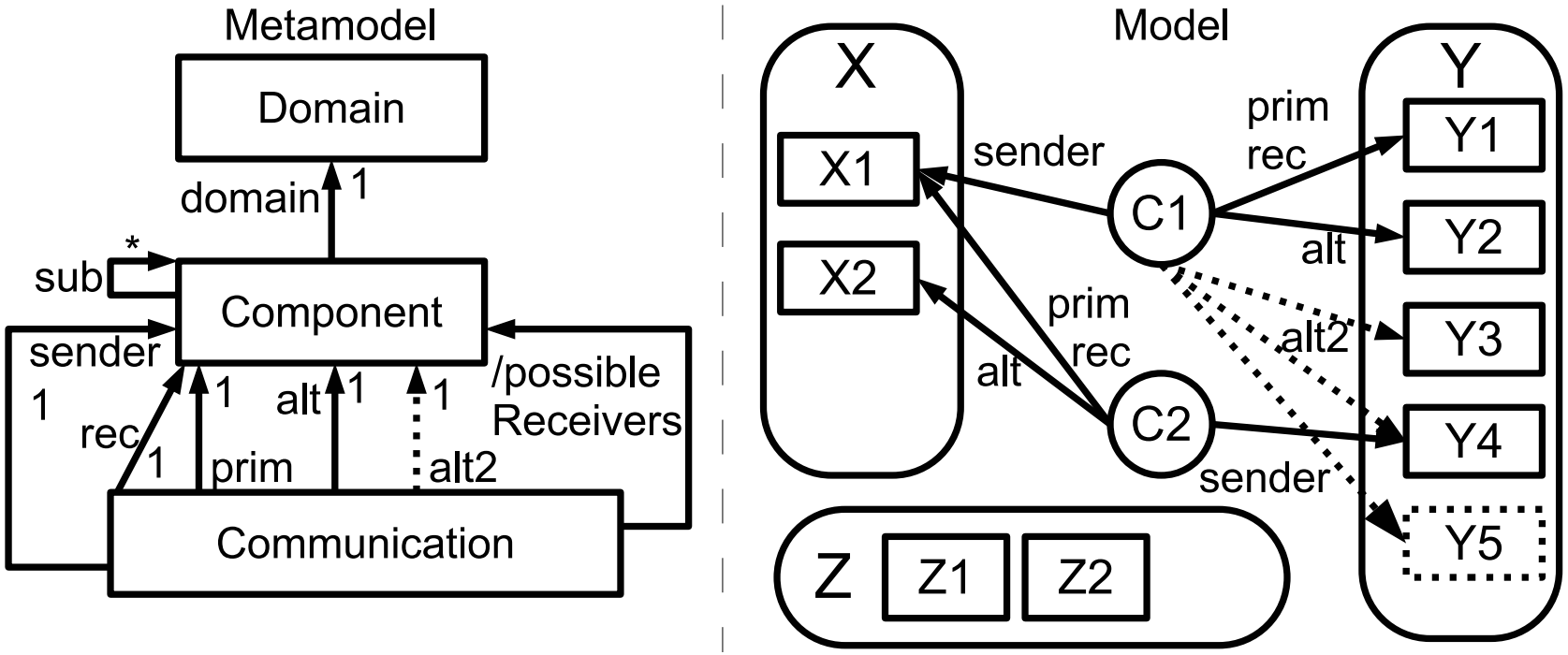

R1: Possible receivers must belong to same domain.
R2: Communication only between distinct domains.
R3: Possible receivers must be distinct.
R4*: Communications must provide alt2.

Domain
Component
Communication

Consistent Co-Evolution Example

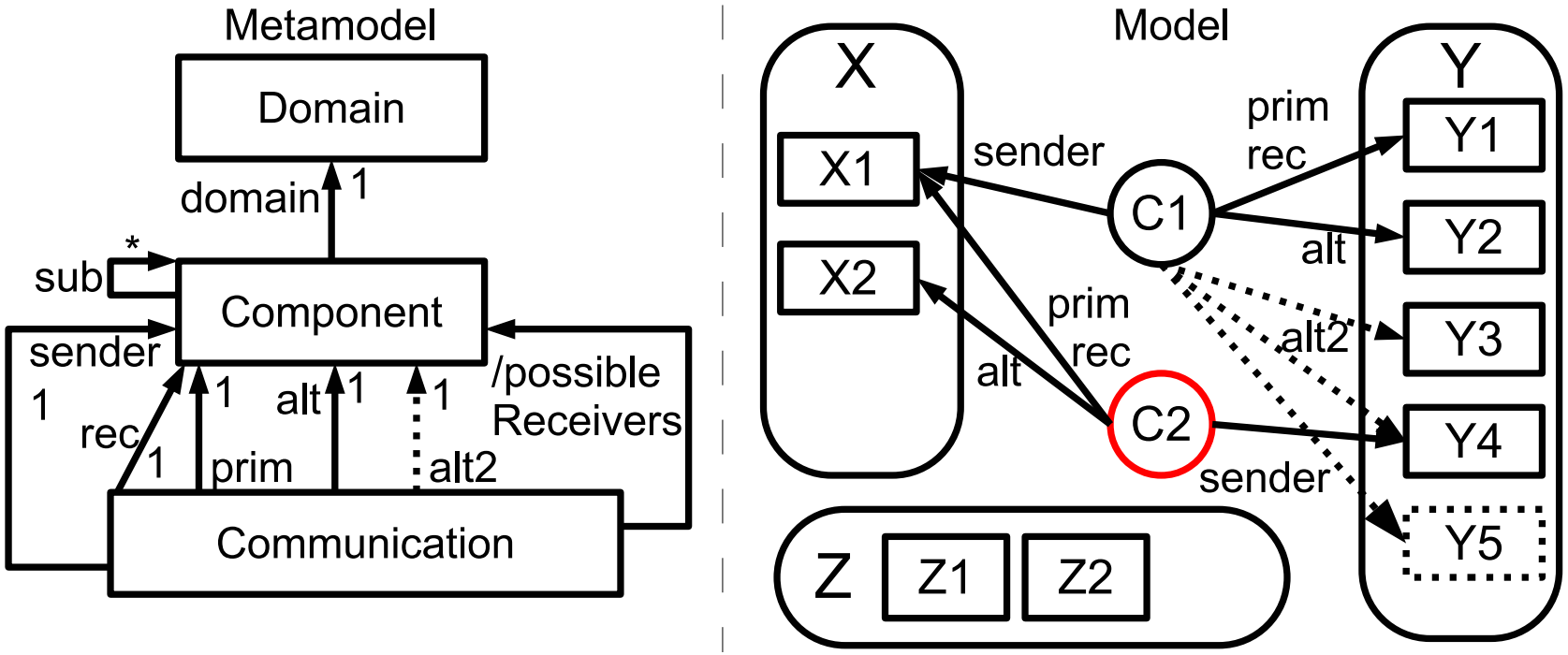

R1: Possible receivers must belong to same domain.
R2: Communication only between distinct domains.
R3: Possible receivers must be distinct.
R4*: Communications must provide alt2.

Domain
Component
Communication

Consistent Co-Evolution Example

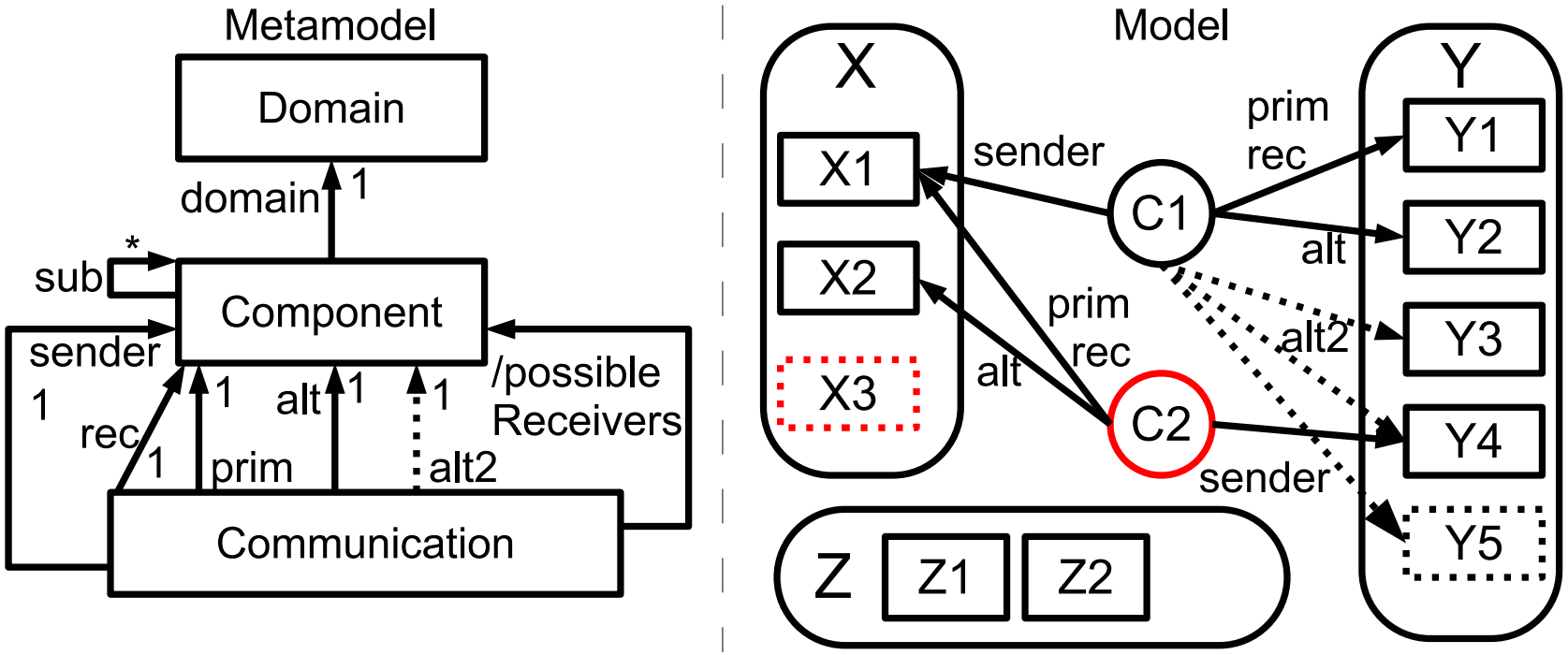

R1: Possible receivers must belong to same domain.
R2: Communication only between distinct domains.
R3: Possible receivers must be distinct.
R4*: Communications must provide alt2.

Domain
Component
Communication

Consistent Co-Evolution Example

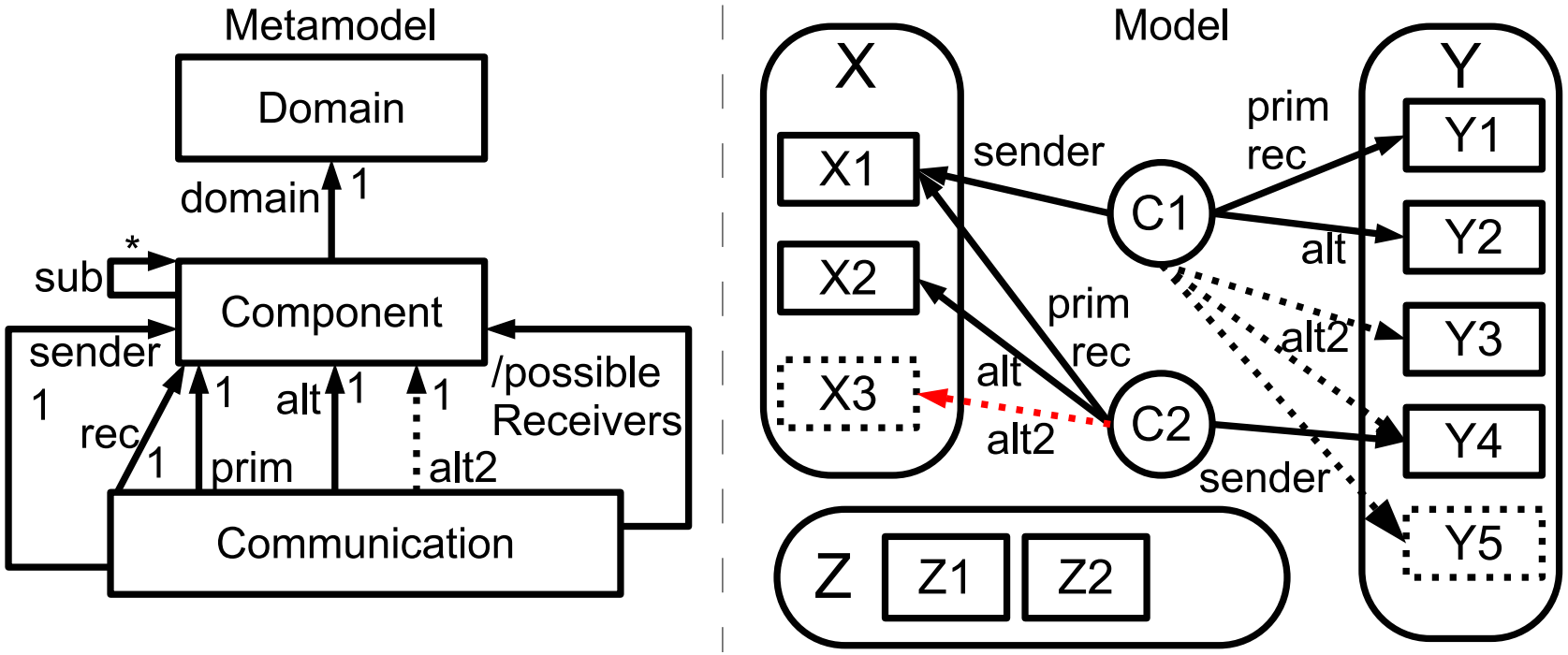

R1: Possible receivers must belong to same domain.
R2: Communication only between distinct domains.
R3: Possible receivers must be distinct.
R4*: Communications must provide alt2.

Domain
Component
Communication

Consistent Co-Evolution Example

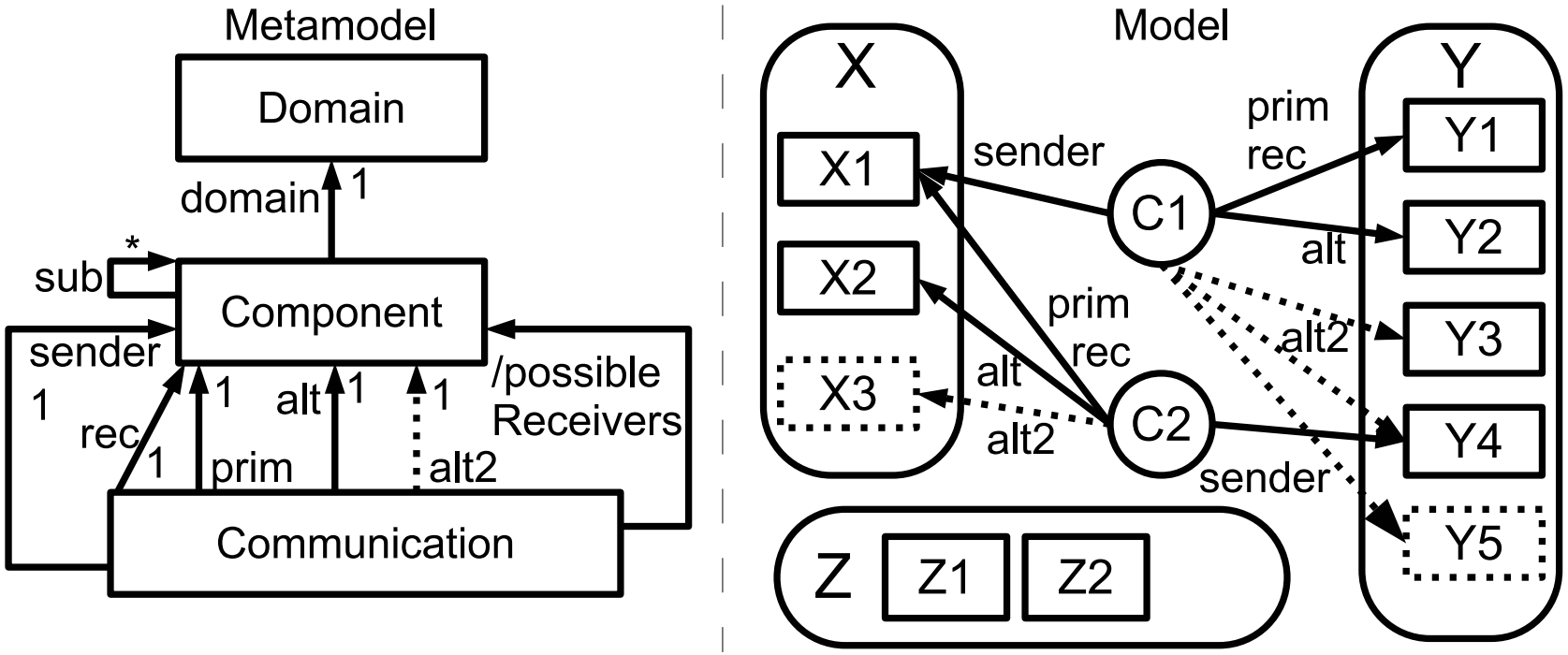

R1: Possible receivers must belong to same domain.
R2: Communication only between distinct domains.
R3: Possible receivers must be distinct.
R4*: Communications must provide alt2.

Domain
Component
Communication

Benefits

Benefits

- Support of arbitrary metamodel changes

Benefits

- Support of arbitrary metamodel changes
  - No categorization needed

Benefits

- Support of arbitrary metamodel changes
  - No categorization needed
- Guidance for complex co-evolution scenarios

Benefits

- Support of arbitrary metamodel changes
  - No categorization needed
- Guidance for complex co-evolution scenarios
- Avoidance of unintended results

Benefits

- Support of arbitrary metamodel changes
  - No categorization needed
- Guidance for complex co-evolution scenarios
- Avoidance of unintended results
- Based on constraints and specific model

Benefits

- Support of arbitrary metamodel changes
  - No categorization needed
- Guidance for complex co-evolution scenarios
- Avoidance of unintended results
- Based on constraints and specific model
- Support for external constraints

Implementation Status

Implementation Status

- Individual parts are implemented

Implementation Status

- Individual parts are implemented
  - Continuous consistency checking of arbitrary models

Implementation Status

- Individual parts are implemented
  - Continuous consistency checking of arbitrary models
  - Incremental constraint management with automatic constraint updates

Implementation Status

- Individual parts are implemented
  - Continuous consistency checking of arbitrary models
  - Incremental constraint management with automatic constraint updates
    - MoDELS'13 Foundations Track, Thursday 10:30AM

Implementation Status

- Individual parts are implemented
  - Continuous consistency checking of arbitrary models
  - Incremental constraint management with automatic constraint updates
    - MoDELS'13 Foundations Track, Thursday 10:30AM
  - Efficient derivation of fixes for inconsistencies

Implementation Status

- Individual parts are implemented
  - Continuous consistency checking of arbitrary models
  - Incremental constraint management with automatic constraint updates
    - MoDELS'13 Foundations Track, Thursday 10:30AM
  - Efficient derivation of fixes for inconsistencies
  - (Semi-)Automatic execution of selected fixes

Future Work

- Integrate partial implementations

Future Work

- Integrate partial implementations
- Validation with industrial metamodels and models

Future Work

- Integrate partial implementations
- Validation with industrial metamodels and models
- Evaluate support for common refactorings

Co-evolution of Metamodels and Models through Consistent Change Propagation

Der Wissenschaftsfonds.

Andreas Demuth

Institute for Systems Engineering
and Automation
Johannes Kepler University Linz, Austria

email: andreas.demuth@jku.at
www: http://www.jku.at/sea